DC30T20

Directional Coupler

Rev A3.1

Description

The products are widely used in China and global 4G/5G base station, 5G network coverage, BeiDou navigation antenna, vehicle-mounted high-precision navigation (unmanned) antenna and other applications. The products have miniaturization, low-loss, wide-bandwidth, high power density, high reliability, high cost-effective and other competitive advantages.

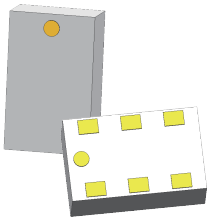

Features:

- 2300 – 3700 MHz
- Mean Coupling 20dB
- 0.56mm Height Profile
- Ultra Low Insertion Loss
- Surface Mountable
- Tape & Reel
- RoHS Compliant
- Halogen Free
- -55°C to 85°C

Electrical Specifications

Frequency	Coupling		Directivity	Return Loss
MHz	*dB Min*	*dB Max*	*dB Min*	*dB Min*
2300 - 2400	19.2	20.2	16	20.0
2400 - 2500	18.7	20.2	17	20.0
2630 - 2655	18.7	20.2	18	18.0
3300 - 3700	19.2	22.5	18	16.5

Insertion Loss	Power	Operating Temp.
dB Max	*Avg. CW Watts*	*°C*
0.25	2	-55 to +95
0.26	2	-55 to +95
0.28	2	-55 to +95
0.32	2	-55 to +95

Notes:
1. All the above data are based on specified demo board.
2. Insertion loss:Thru board loss has been removed.

Mechanical Outline

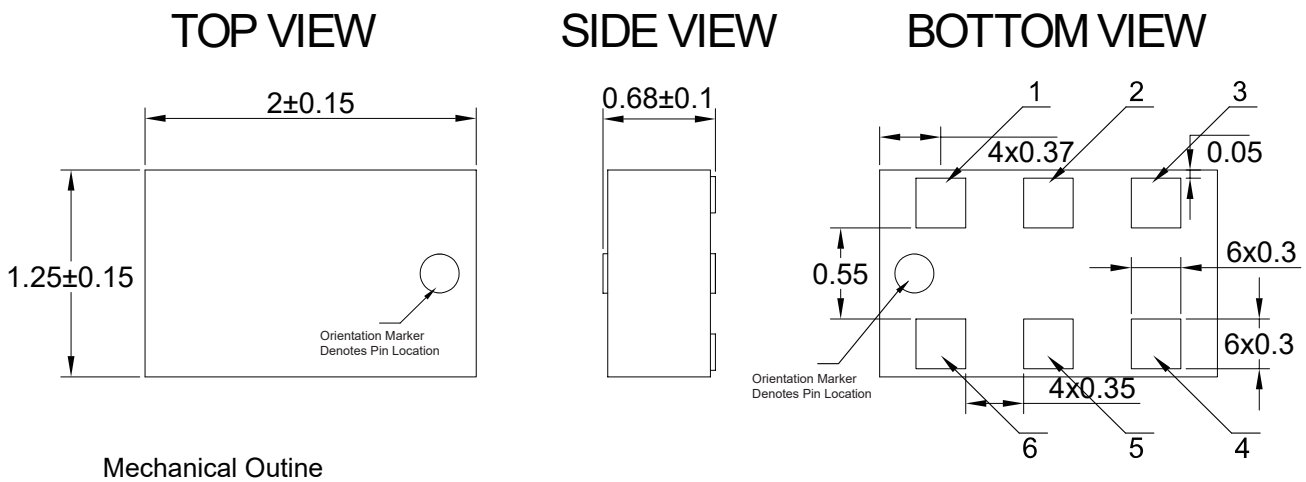

Mechanical Outine
-Dimensions are in Millimeters
-Tolerances are Non-Cumulative

Yantel Corporation

Add: No.308-322, 3F, Building 1, Juchuang Jingu Innovation Park, Wenyuan Road 35, Xili Street, Nanshan, Shenzhen, China
Tel: 86-755-8355-1886 Fax: 86-755-8355-2533
For detailed performance specs & shopping online see Yantel web site : www.yantel-corp.com

DC30T20

Directional Coupler

Rev A3.1

Directional Coupler Pin Configuration

The DC30T20 has an orientation marker to denote Pin1. Once port one has been identified the other ports are known automatically. Please see the chart below for clarification:

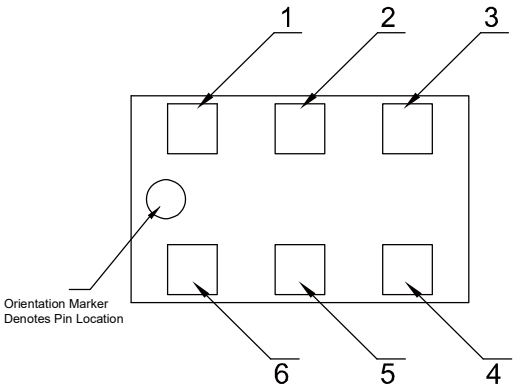

Pin	Configuration-1	Configuration-2
1	Direct	Input
2	Isolated	Coupled
3	Gnd	Gnd
4	Gnd	Gnd
5	Coupled	Isolated
6	Input	Direct

Typical Performance Data (@25

Frequency (MHz)	Coupling (dB)	Transmission (dB)	Insertion Loss (dB)	Directivity (dB)	Return Loss(dB)			
					S11	S22	S33	S44
2300	-19.58	-0.28	-0.23	-19.47	-28.51	-28.36	-39.33	-38.84
2370	-19.49	-0.28	-0.23	-20.22	-30.19	-30.10	-39.19	-38.16
2440	-19.43	-0.29	-0.24	-20.80	-31.96	-32.32	-38.79	-37.91
2510	-19.37	-0.29	-0.24	-21.50	-33.04	-32.99	-45.28	-45.27
2580	-19.33	-0.30	-0.24	-22.11	-35.19	-36.01	-42.39	-45.33
2650	-19.32	-0.30	-0.25	-22.62	-36.46	-39.99	-42.78	-45.11
2720	-19.31	-0.30	-0.25	-23.31	-36.42	-39.25	-40.55	-41.66
2790	-19.32	-0.31	-0.25	-24.10	-35.84	-38.61	-34.98	-37.82
2860	-19.35	-0.31	-0.26	-24.66	-34.36	-35.76	-33.61	-35.73
2930	-19.40	-0.32	-0.26	-24.80	-32.63	-32.34	-30.08	-31.51
3000	-19.47	-0.32	-0.27	-25.75	-31.02	-30.74	-28.26	-29.51
3070	-19.56	-0.33	-0.27	-26.33	-29.11	-29.29	-28.12	-28.88
3140	-19.67	-0.33	-0.28	-25.93	-27.40	-26.99	-26.13	-26.34
3210	-19.80	-0.33	-0.29	-25.16	-26.00	-25.40	-24.57	-24.94
3280	-19.96	-0.34	-0.29	-24.84	-25.04	-25.10	-24.11	-24.15
3350	-20.14	-0.35	-0.30	-23.78	-23.68	-23.28	-22.79	-22.42
3420	-20.35	-0.35	-0.31	-22.62	-22.61	-22.39	-21.64	-21.37
3490	-20.57	-0.34	-0.30	-21.45	-22.13	-22.05	-20.89	-20.70
3560	-20.83	-0.34	-0.30	-20.70	-21.70	-21.44	-19.67	-19.71
3630	-21.13	-0.34	-0.31	-19.62	-20.84	-20.58	-18.80	-18.82
3700	-21.33	-0.33	-0.30	-19.27	-20.42	-20.21	-18.36	-18.32

Yantel Corporation

Add: No.308-322, 3F, Building 1, Juchuang Jingu Innovation Park, Wenyuan Road 35, Xili Street, Nanshan, Shenzhen, China
Tel: 86-755-8355-1886 Fax: 86-755-8355-2533
For detailed performance specs & shopping online see Yantel web site : www.yantel-corp.com

Power Derating Curves

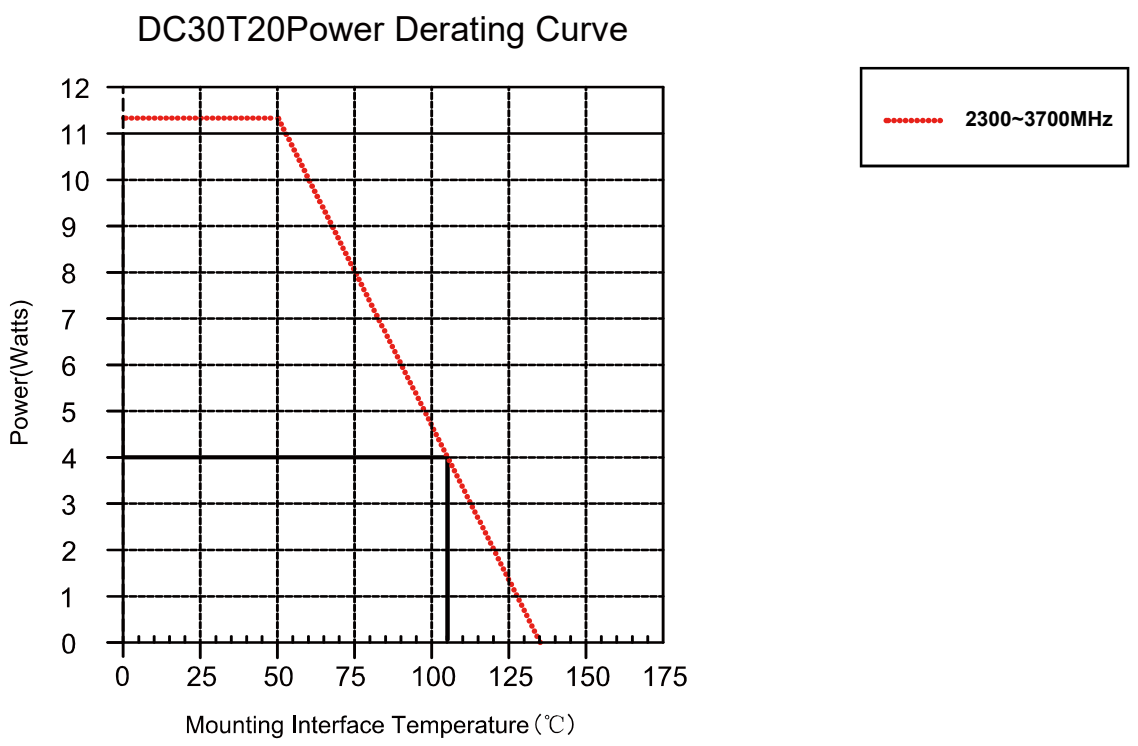

Power Derating:

As the mounting interface temperature approaches the maximum continuous operating temperature, the power handling decreases to zero.

Typical Performance (-55°C,25°C,95°C,125°C: 2300-3700 MHz)

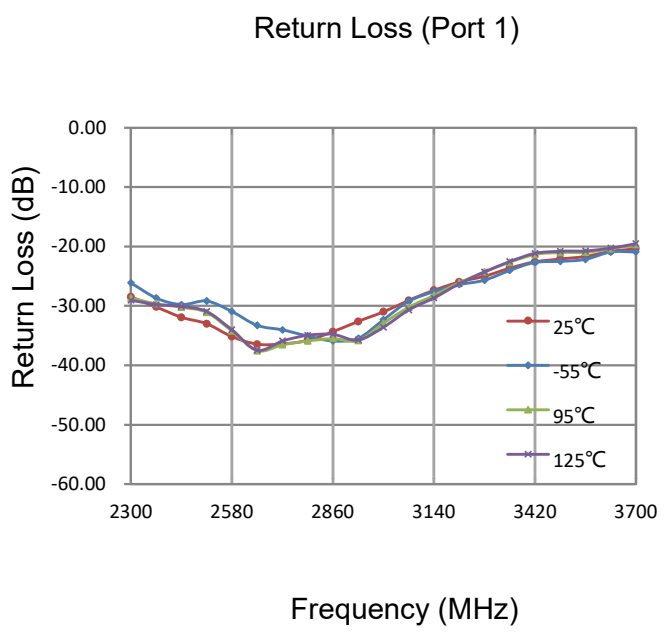

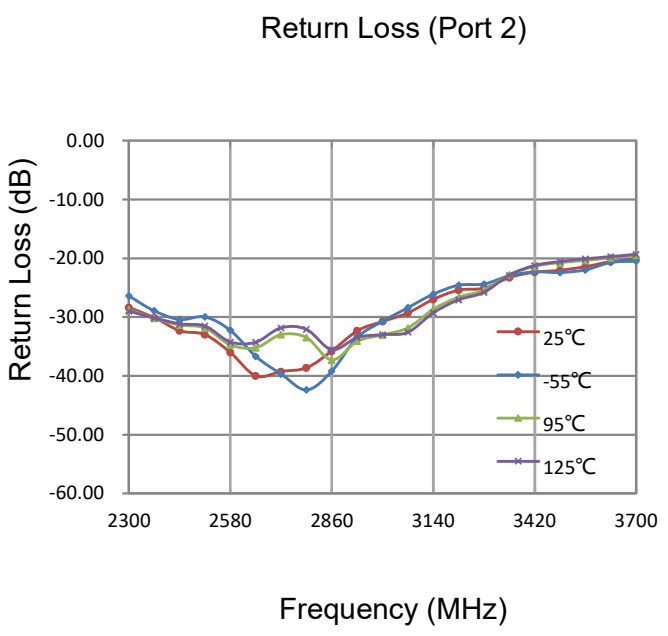

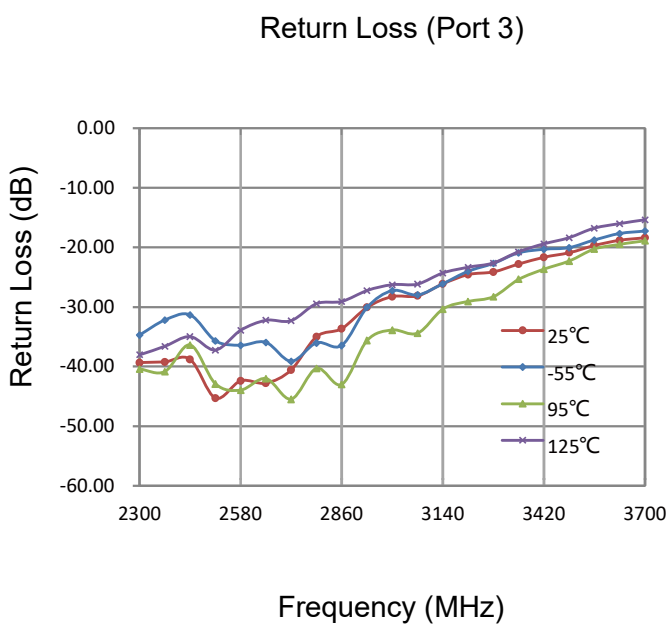

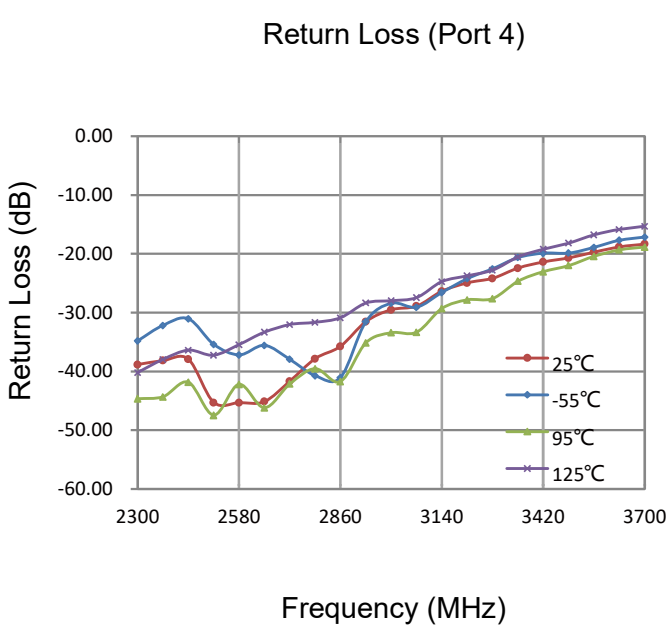

Typical Performance (-55°C,25°C,95°C,125°C: 2300-3700 MHz)

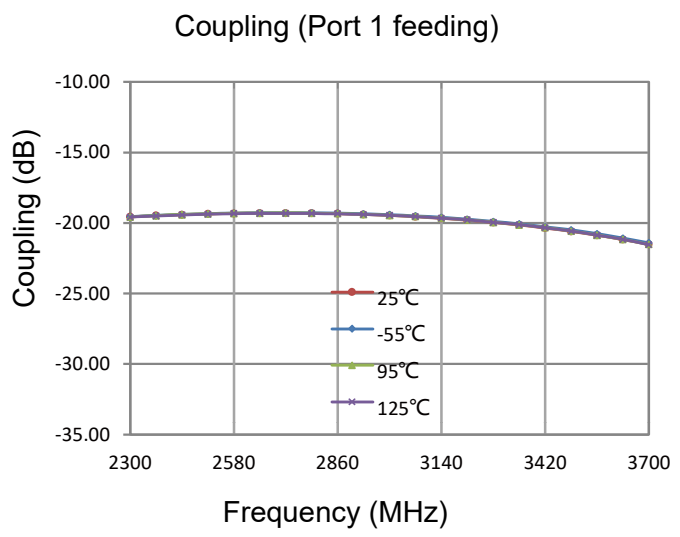

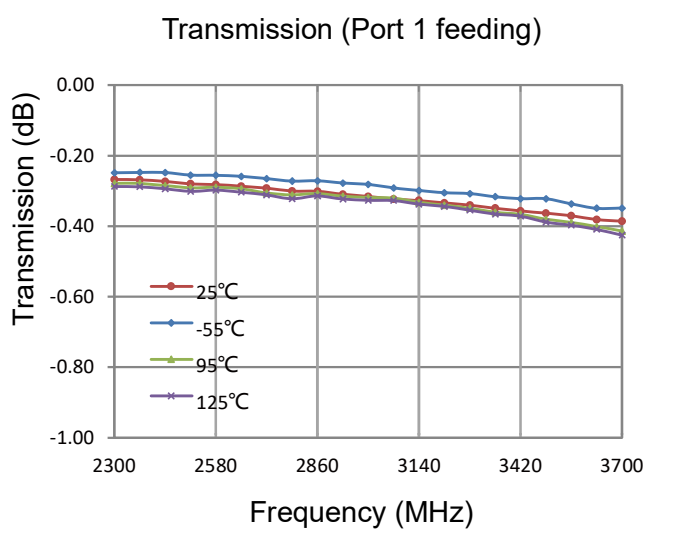

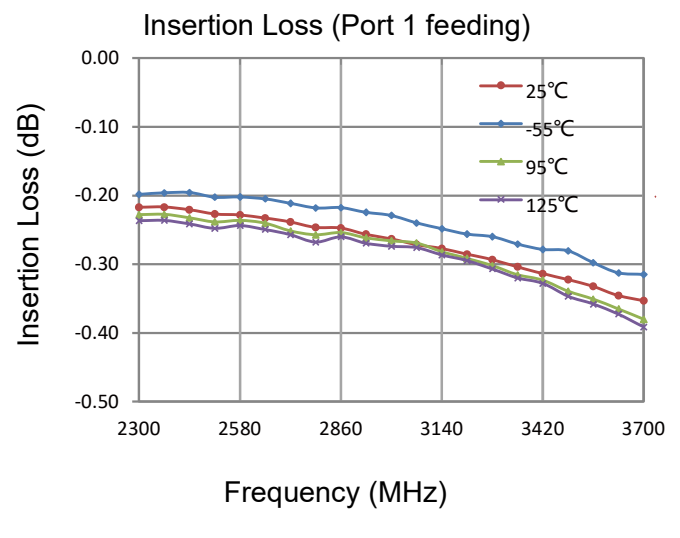

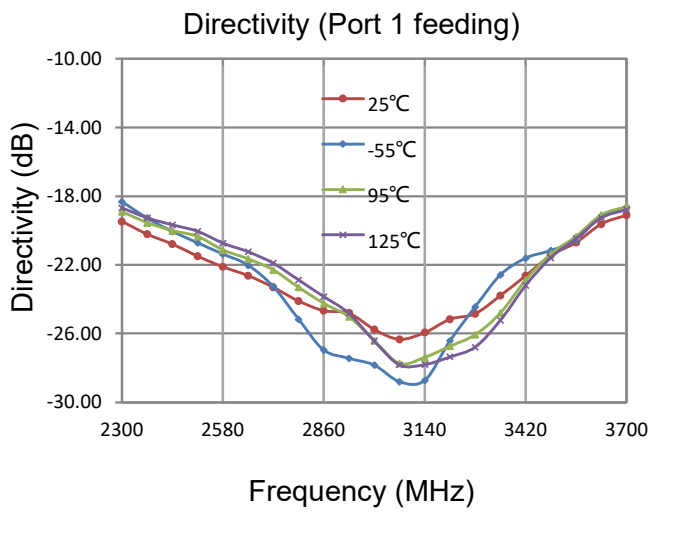

Yantel Corporation

Add: No.308-322, 3F, Building 1, Juchuang Jingu Innovation Park, Wenyuan Road 35, Xili Street, Nanshan, Shenzhen, China
Tel: 86-755-8355-1886 Fax: 86-755-8355-2533
For detailed performance specs & shopping online see Yantel web site : www.yantel-corp.com

Definition of Measured Specifications

Parameter	Definition	Mathematical Representation
VSWR (Voltage Standing Wave Ratio)	The impedance match of the coupler to a 50Ω system. A VSWR of 1:1 is optimal.	$VSWR = \frac{V_{max}}{V_{min}}$ Vmax = voltage maxima of a standing wave Vmin = voltage minima of a standing wave
Return Loss	The impedance match of the coupler to a 50Ω system. Return Loss is an alternate means to express VSWR.	Return Loss (dB)= $20\log \frac{VSWR+1}{VSWR-1}$
Insertion Loss	The input power divided by the sum of the power at the two output ports.	Insertion Loss(dB)= $10\log \frac{P_{in}}{P_{cpl}+P_{transmission}}$
Isolation	The input power divided by the power at the isolated port.	Isolation(dB)= $10\log \frac{P_{in}}{P_{iso}}$
Phase Balance	The difference in phase angle between the two output ports.	Phase at coupled port – Phase at transmisson port
Amplitude Balance	The power at each output divided by the average power of the two outputs.	$10\log \frac{P_{cpl}}{\left(\frac{P_{cpl}+P_{transmission}}{2}\right)}$ or $10\log \frac{P_{transmission}}{\left(\frac{P_{cpl}+P_{transmission}}{2}\right)}$

Test Method

1. Calibrating your vector network analyzer.
2. Connect the VNA 4 Port to DUT respectively.
3. Measure the data of coupling through port 1 to port 4(S41).
4. Measure the data of transmission through port 1 to port 3(S31).
5. Measure the data of isolation through port 1 to port 2(S21).
6. Measure the data of phase port 4 & port 3(port 1 feeding).
7. Measure the data of return loss port 1, port 2, port 3 & port 4.
8. According to the above data to calculate insertion loss, amplitude balance & phase.

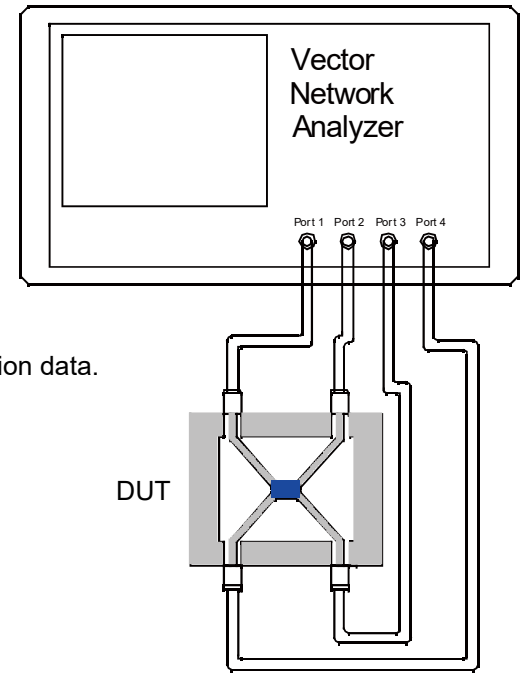

Note:

1. When calculating insertion loss at room temperature, demo board loss should be removed from both coupling & transmission data.

Please refer to the below table for demo board loss :

Frequency Range(MHz)	Demo Board Loss (dB) @25℃
470-860	0.07
800-1000	0.10
1200-1700	0.15
1700-2000	0.15
2000-2300	0.20
2300-3700	0.25

Yantel Corporation

Add: No.308-322, 3F, Building 1, Juchuang Jingu Innovation Park, Wenyuan Road 35, Xili Street, Nanshan, Shenzhen, China
Tel: 86-755-8355-1886 Fax: 86-755-8355-2533
For detailed performance specs & shopping online see Yantel web site : www.yantel-corp.com

Recommended PCB Layout

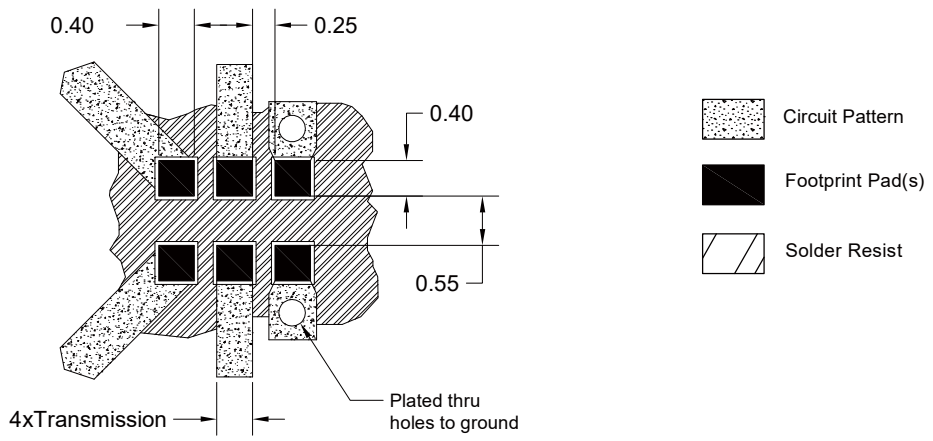

NOTE:

1. 50Ω line width is shown above designing.
2. Bottom side of the PCB is continuous ground plane.
3. All dimensions shown in mm [inch].

Reflow Profile

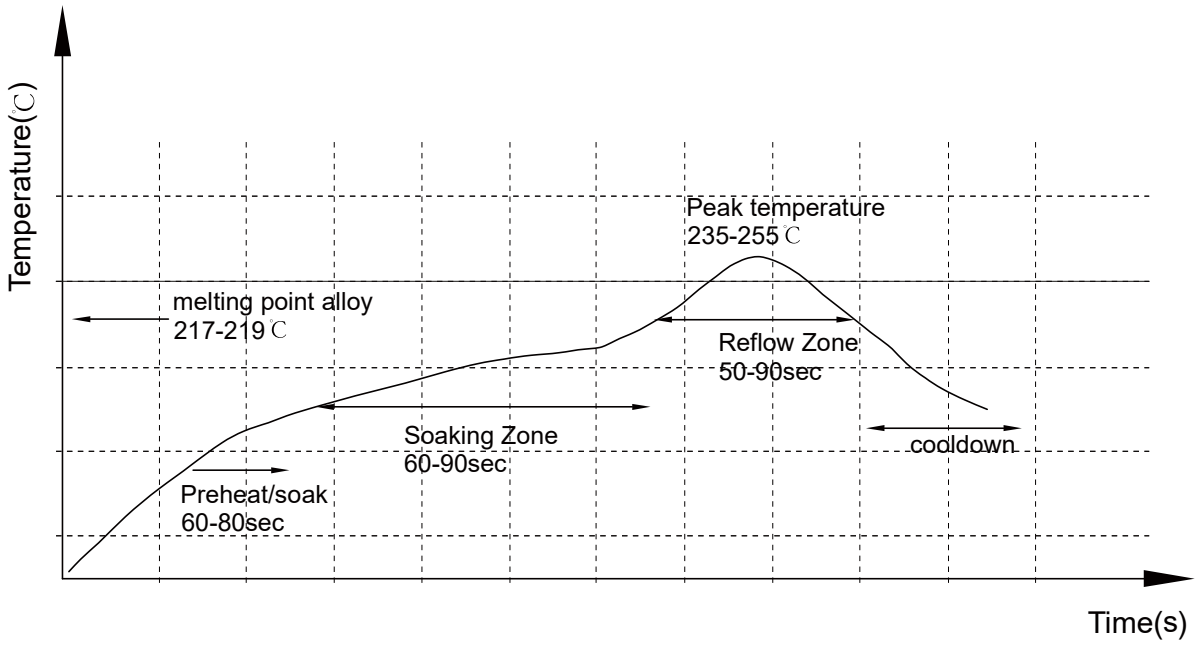

Reliability Test Flow

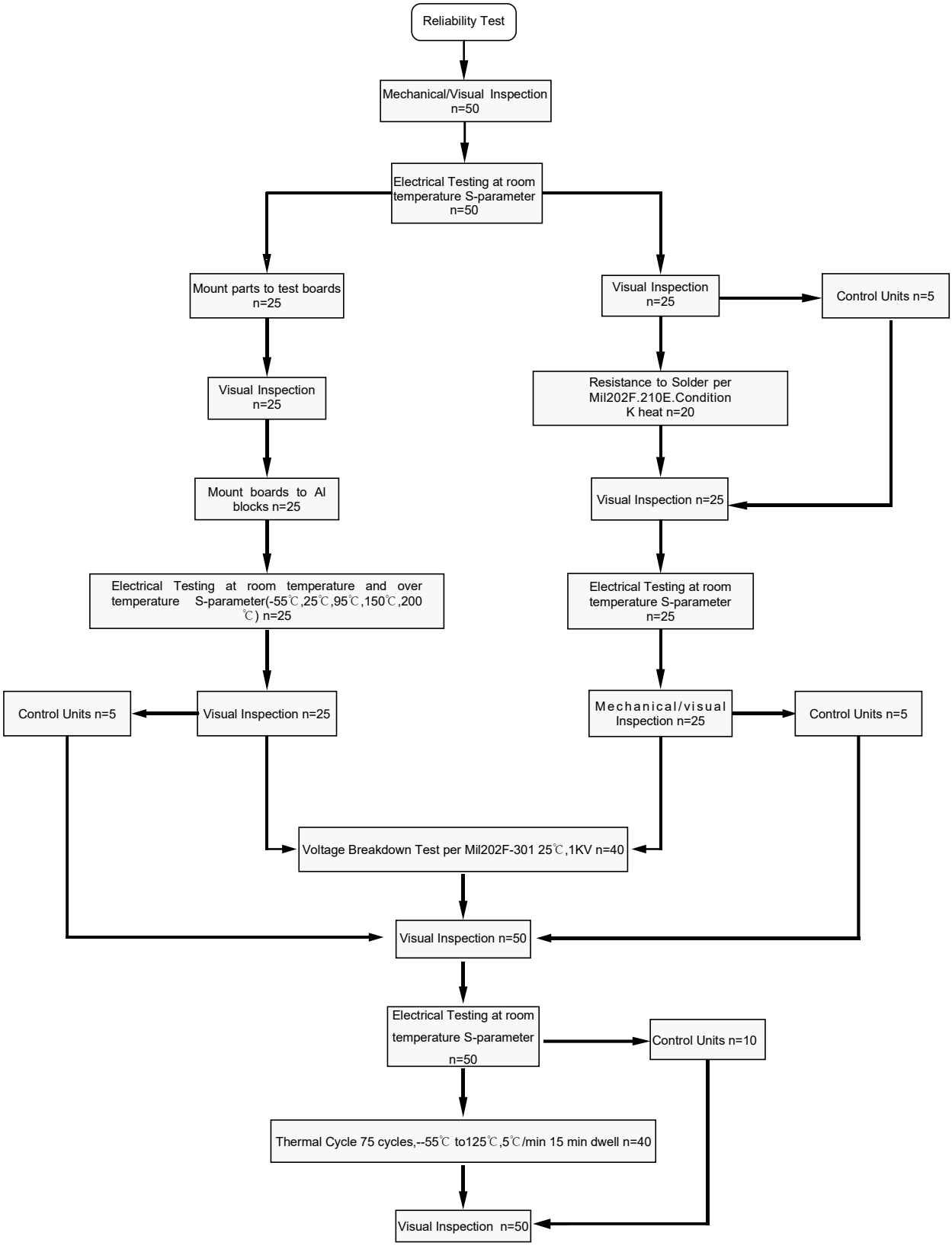

Reliability Test Flow

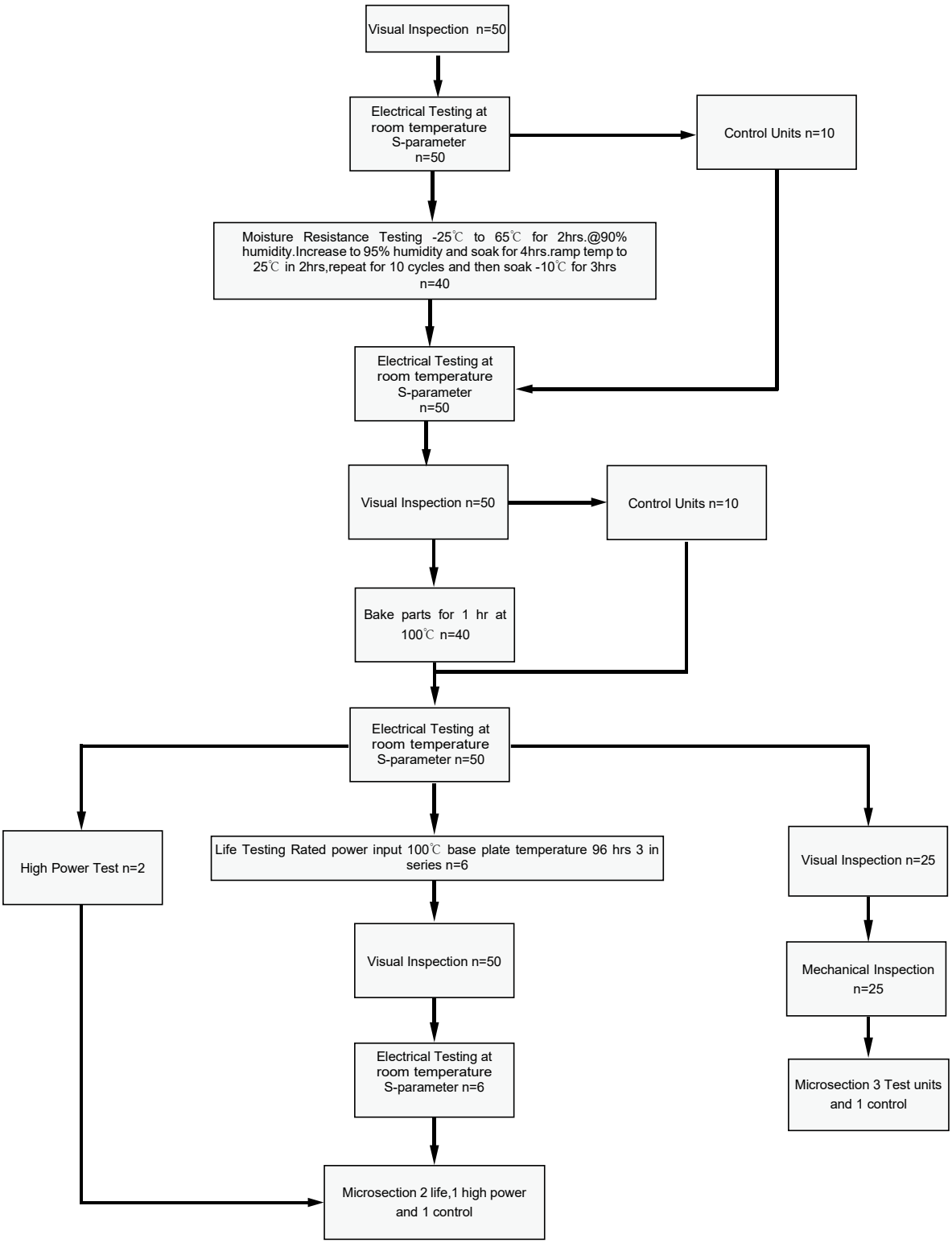

Yantel Corporation

Add: No.308-322, 3F, Building 1, Juchuang Jingu Innovation Park, Wenyuan Road 35, Xili Street, Nanshan, Shenzhen, China
Tel: 86-755-8355-1886 Fax: 86-755-8355-2533
For detailed performance specs & shopping online see Yantel web site : www.yantel-corp.com

DC30T20

Directional Coupler

Rev A3.1

Tape and Reel Drawing

Feeding Direction

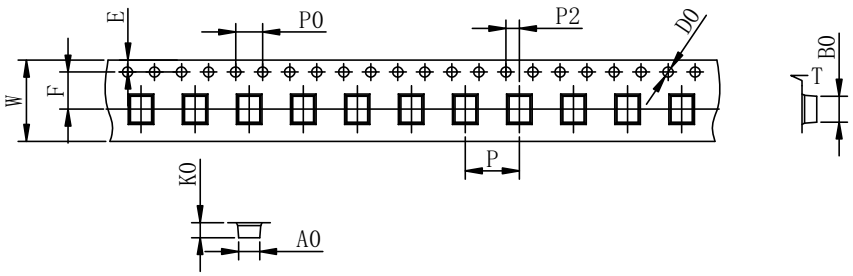

ITEM	W	A0	B0	K0	K1	P	F	E	D0	P0	P2	t	7"
DIM(mm)	8.0	1.45	2.30	1.00		4.0	3.5	1.75	1.5	4.0	2.0	0.2	P/R
TOLE	+0.10 -0.10	+0.10 -0.10	+0.10 -0.10	+0.10 -0.10	+0.10 -0.10	+0.10 -0.10	+0.10 -0.10	+0.10 -0.10	+0.10 -0.00	+0.10 -0.10	+0.10 -0.10	+0.05 -0.05	4000pcs

Notice:

A.10 Sprocket hole pitch cumulative tolerance is 0.2mm.

B. Carrier camber shall be not more than 1mm per 100mm through a length of 250mm.

C. All dimensions meet EIA-418-B requirements.

D. A0 & B0 measured as indicated.

E. K0 measured from a place on the inside bottom of the pocket to top surface of carrier.

F. Material: PE 100

G. Thickness: 0.30±0.05mm

H. 4000 units (maximum) / T&R

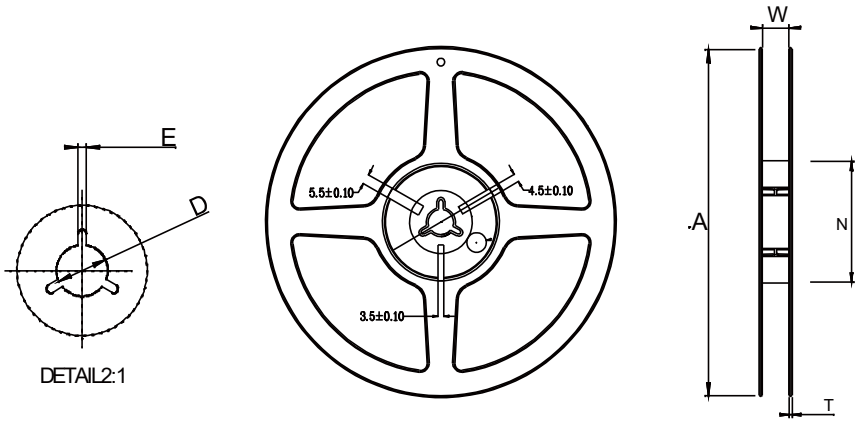

Symbol	Dimensions(mm)
W	9.0±0.4
A	180±0.3
N	60±0.3
T	1.4±0.2
E	3±0.5
D	25±0.8

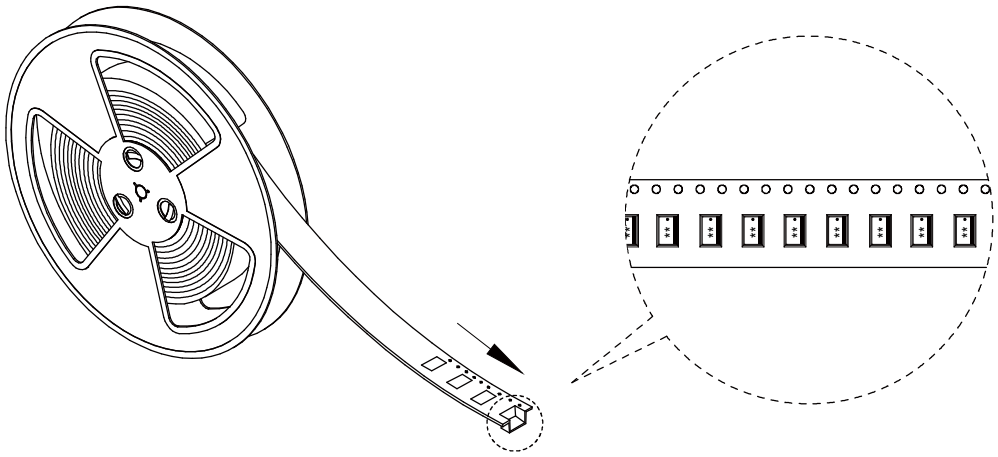

Yantel Corporation

Add: No.308-322, 3F, Building 1, Juchuang Jingu Innovation Park, Wenyuan Road 35, Xili Street, Nanshan, Shenzhen, China

Tel: 86-755-8355-1886 Fax: 86-755-8355-2533

For detailed performance specs & shopping online see Yantel web site : www.yantel-corp.com