DC2500P04

Directional Coupler

Rev A0

Description

The products are widely used in China and global 4G/5G base station, 5G network coverage, BeiDou navigation antenna, vehicle-mounted high-precision navigation (unmanned) antenna and other applications. The products have miniaturization, low-loss, wide-bandwidth, high power density, high reliability, high cost-effective and other competitive advantages.

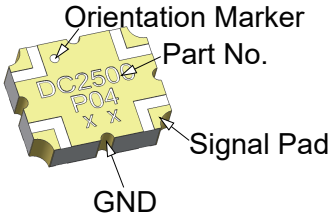

Features:

- 2300-2700 MHz
- 4G/5G base station
- High Power
- Very Low Loss
- Tight Coupling
- High Directivity
- Production Friendly
- Tape and Reel
- Lead Free

Electrical Specifications

Frequency	Coupling	Isolation	VSWR
MHz	*dB*	*dB Min*	*Max : 1*
2300 - 2700	4.2±0.3	21	1.25

Phase Balance	Insertion Loss	Power	Operating Temp.
Degrees	*dB Max*	*Avg. CW Watts at 95 ˚C*	*ºC*
90 ± 4.0	0.25	60	-55 to +95

Notes:
1. All the above data are based on specified demo board.
2. Insertion loss:Thru board loss has been removed.

Mechanical Outline

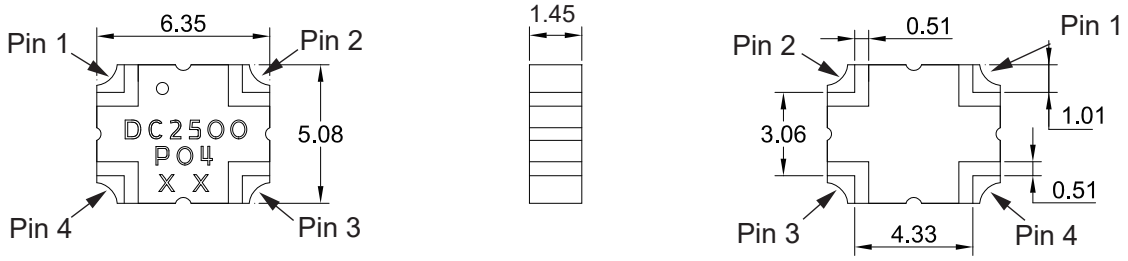

Notes: 1. All dimensions show in millimeters
2. RoHS Compliant in accordance with EU Directive(2011/65/EU)
3. Dimension tolerance: ±0.20

Yantel Corporation

Add: No.308-322, 3F, Building 1, Juchuang Jingu Innovation Park, Wenyuan Road 35, Xili Street, Nanshan, Shenzhen, China
Tel: 86-755-8355-1886 Fax: 86-755-8355-2533
For detailed performance specs & shopping online see Yantel web site : www.yantel-corp.com

Directional Coupler Pin Configuration

The DC2500P04 has an orientation marker to denote Pin1. Once port one has been identified the other ports are known automatically. Please see the chart below for clarification:

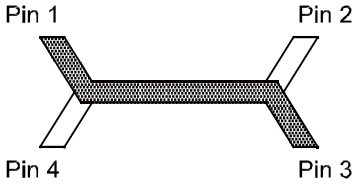

Pin 1	Pin 2	Pin 3	Pin 4
Input	Isolate	Transmission	Coupling
Isolate	Input	Coupling	Transmission
Transmission	Coupling	Input	Isolate
Coupling	Transmission	Isolate	Input

Typical Performance Data (@25℃)

Frequency (MHz)	Coupling (dB)	Transmission (dB)	Insertion Loss (dB)	Isolation (dB)	Phase (degree)	Return Loss(dB)			
						S11	S22	S33	S44
2300	-4.40	-2.21	-0.16	-29.03	-90.70	-24.11	-27.78	-23.87	-27.86
2320	-4.40	-2.21	-0.16	-29.19	-90.74	-23.97	-27.99	-23.61	-27.87
2340	-4.40	-2.22	-0.16	-28.83	-90.78	-23.92	-28.06	-23.51	-27.86
2360	-4.40	-2.22	-0.17	-28.77	-90.81	-23.77	-28.06	-23.28	-27.99
2380	-4.39	-2.22	-0.16	-28.69	-90.88	-23.87	-27.91	-23.22	-27.76
2400	-4.38	-2.22	-0.16	-28.55	-91.00	-23.94	-27.61	-23.34	-27.36
2420	-4.38	-2.23	-0.16	-28.59	-91.00	-23.80	-27.63	-23.36	-27.20
2440	-4.38	-2.23	-0.16	-28.47	-90.94	-23.76	-27.39	-23.42	-27.36
2460	-4.39	-2.22	-0.16	-28.47	-90.96	-23.54	-27.11	-23.38	-27.46
2480	-4.40	-2.23	-0.17	-28.41	-91.00	-23.64	-27.13	-23.13	-27.23
2500	-4.41	-2.23	-0.17	-28.14	-91.06	-23.65	-26.71	-23.09	-27.13
2520	-4.40	-2.23	-0.17	-28.03	-91.10	-23.31	-26.44	-22.76	-26.89
2540	-4.41	-2.22	-0.17	-28.13	-91.12	-23.01	-26.41	-22.59	-26.72
2560	-4.41	-2.22	-0.17	-27.95	-91.17	-22.79	-26.27	-22.47	-27.08
2580	-4.42	-2.22	-0.17	-27.83	-91.10	-22.70	-26.13	-22.17	-26.56
2600	-4.42	-2.22	-0.17	-27.45	-91.13	-22.57	-25.75	-21.84	-26.14
2620	-4.44	-2.22	-0.18	-26.91	-91.10	-22.19	-25.34	-21.83	-25.83
2640	-4.45	-2.21	-0.18	-26.92	-91.14	-21.99	-24.83	-21.81	-25.75
2660	-4.47	-2.21	-0.19	-26.74	-91.22	-21.66	-24.54	-21.78	-25.68
2680	-4.47	-2.22	-0.19	-26.66	-91.24	-21.45	-24.23	-21.63	-25.59
2700	-4.48	-2.21	-0.19	-26.20	-91.21	-21.31	-23.84	-21.26	-24.89

Add: No.308-322, 3F, Building 1, Juchuang Jingu Innovation Park, Wenyuan Road 35, Xili Street, Nanshan, Shenzhen, China
Tel: 86-755-8355-1886 Fax: 86-755-8355-2533
For detailed performance specs & shopping online see Yantel web site : www.yantel-corp.com

Power Derating Curves

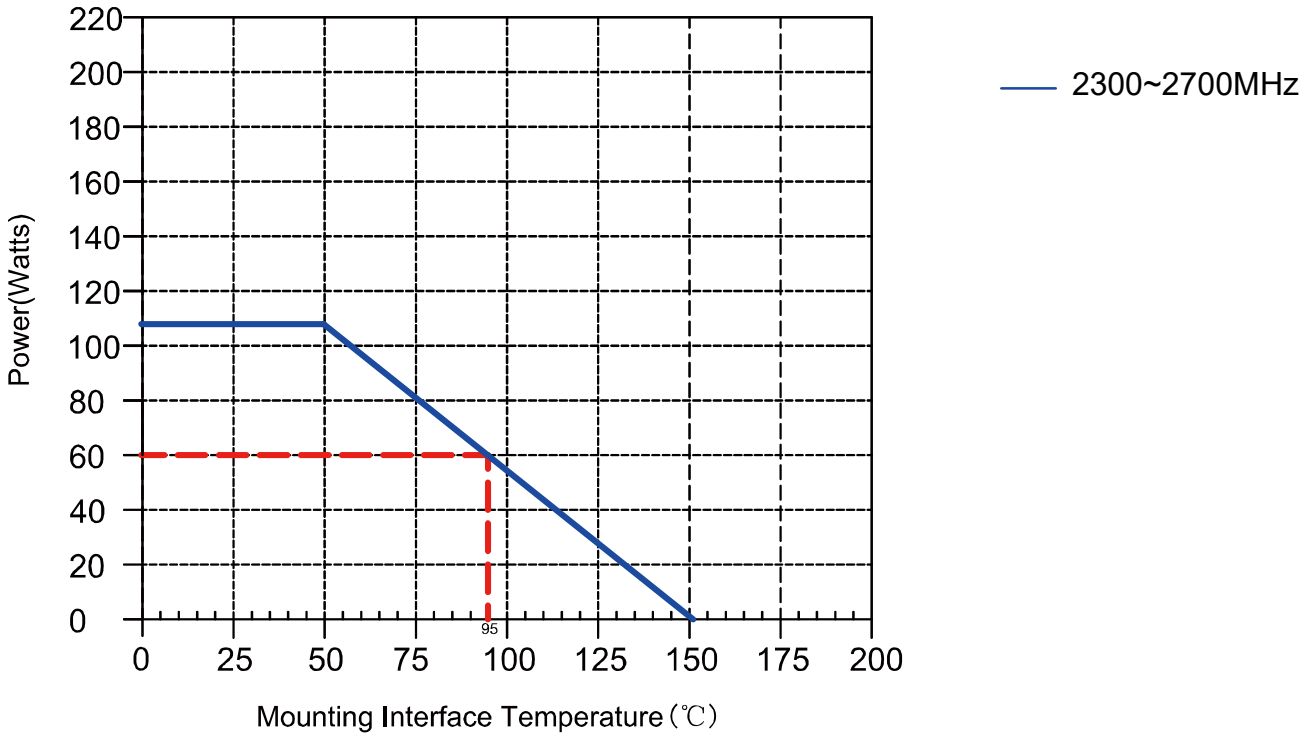

Power Derating:

As the mounting interface temperature approaches the maximum continuous operating temperature, the power handling decreases to zero.

Add: No.308-322, 3F, Building 1, Juchuang Jingu Innovation Park, Wenyuan Road 35, Xili Street, Nanshan, Shenzhen, China
Tel: 86-755-8355-1886 Fax: 86-755-8355-2533
For detailed performance specs & shopping online see Yantel web site : www.yantel-corp.com

Typical Performance (-55°C, 25°C, 105°C, 125°C:2300-2700 MHz)

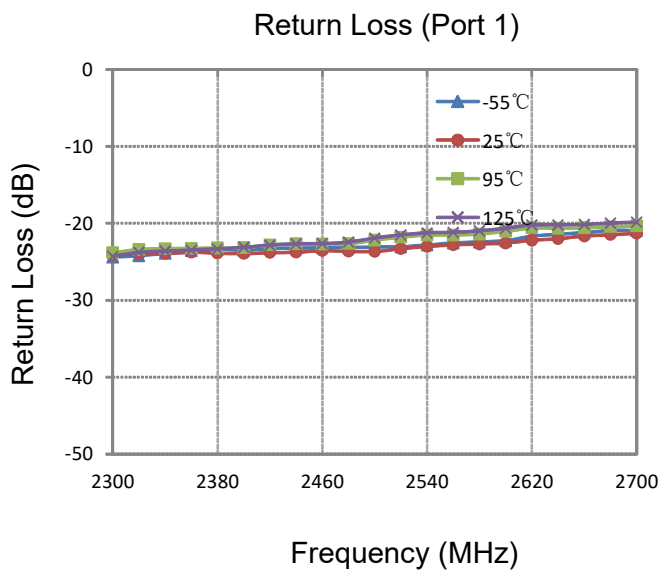

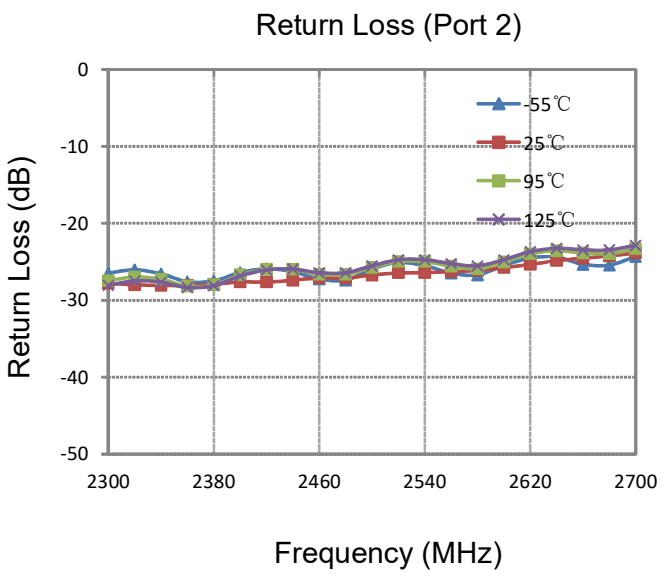

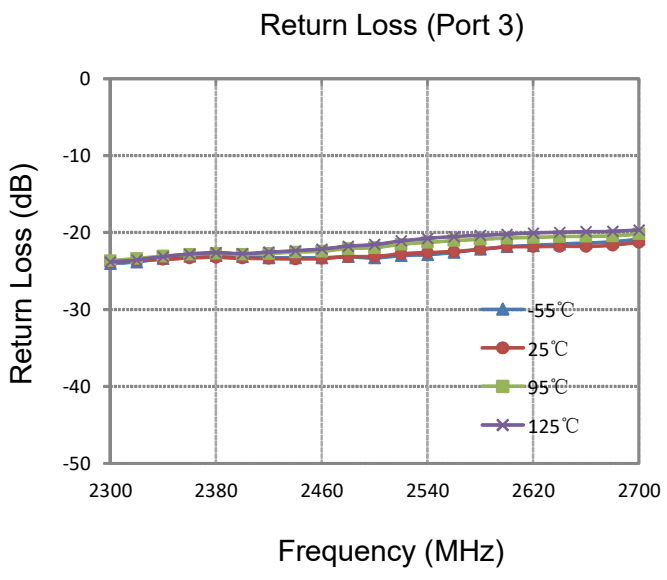

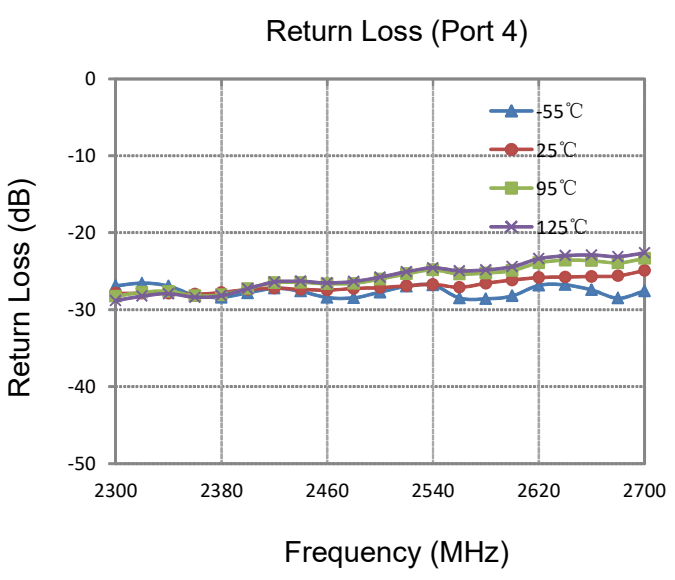

DC2500P04

Directional Coupler

Rev A0

Typical Performance (-55°C, 25°C, 105°C, 125°C: 2300-2700 MHz)

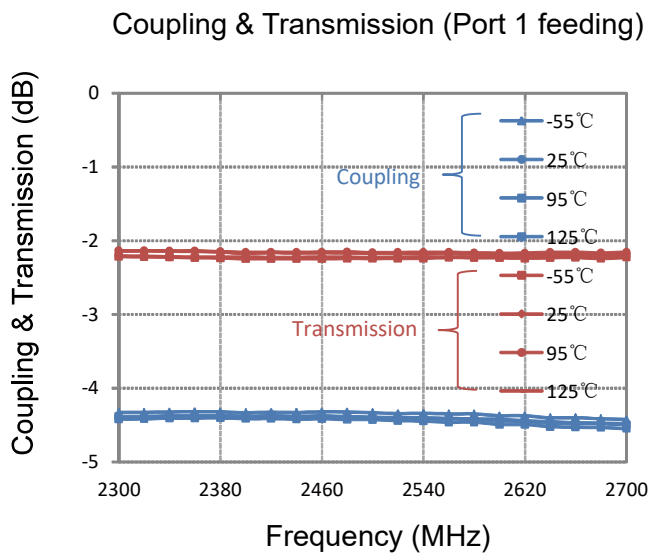

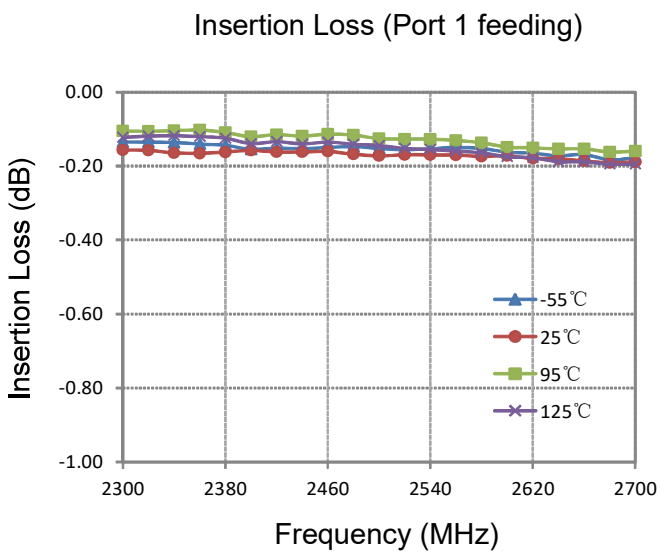

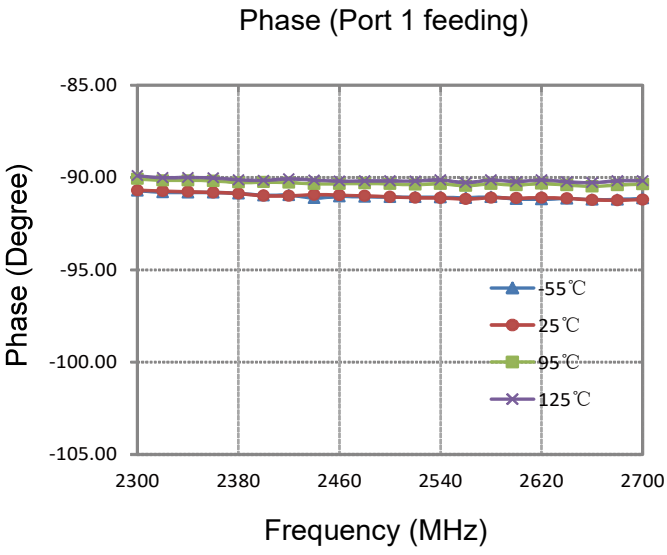

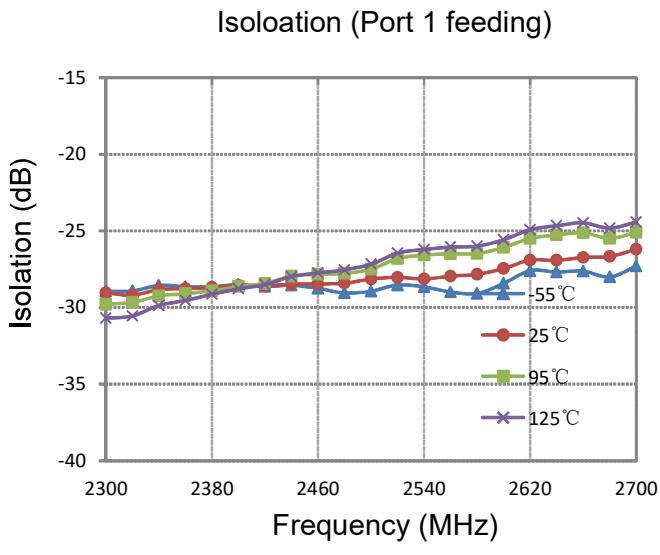

Yantel Corporation

Add: No.308-322, 3F, Building 1, Juchuang Jingu Innovation Park, Wenyuan Road 35, Xili Street, Nanshan, Shenzhen, China
Tel: 86-755-8355-1886 Fax: 86-755-8355-2533
For detailed performance specs & shopping online see Yantel web site : www.yantel-corp.com

DC2500P04

Directional Coupler

Rev A0

Description of Measured Specifications

Parameter	Description
VSWR	Voltage standing wave ratio, the impedance match to 50Ω, the ideal value is 1:1.
Return Loss	Loss of signal power resulting from the reflection caused by discontinuity of transmission line.
Insertion Loss	The input power divided by sum of power at the coupling port & transmission port.
Coupling	The input power divided by the power at coupling port.
Transmission	The input power divided by the power at transmission port.
Directivity	The power at the coupling port divided by the power at the isolated.
Phase Balance	The difference between coupling port and transmission port.

Test Method

1. Calibrating your vector network analyzer.
2. Connect the VNA 4 Port to DUT respectively.
3. Measure the data of coupling through port 1 to port 4(S41).
4. Measure the data of transmission through port 1 to port 3(S31).
5. Measure the data of isolation through port 1 to port 2(S21).
6. Measure the data of return loss port 1, port 2, port 3 & port 4.
7. According to the above data to calculate insertion loss, directivity and phase balance.

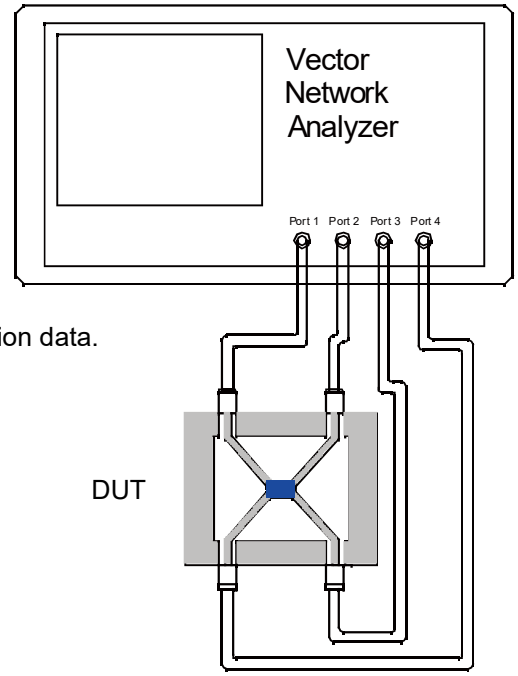

Note:
1. When calculating insertion loss at room temperature, demo board loss should be removed from both coupling & transmission data.
Please refer to the below table for demo board loss :

Frequency Range(MHz)	Demo Board Loss (dB) @25℃
470-860	0.07
800-1000	0.10
1200-1700	0.15
1700-2000	0.15
2000-2300	0.20
2300-2700	0.25

Yantel Corporation

Add: No.308-322, 3F, Building 1, Juchuang Jingu Innovation Park, Wenyuan Road 35, Xili Street, Nanshan, Shenzhen, China
Tel: 86-755-8355-1886 Fax: 86-755-8355-2533
For detailed performance specs & shopping online see Yantel web site : www.yantel-corp.com

Recommended PCB Layout

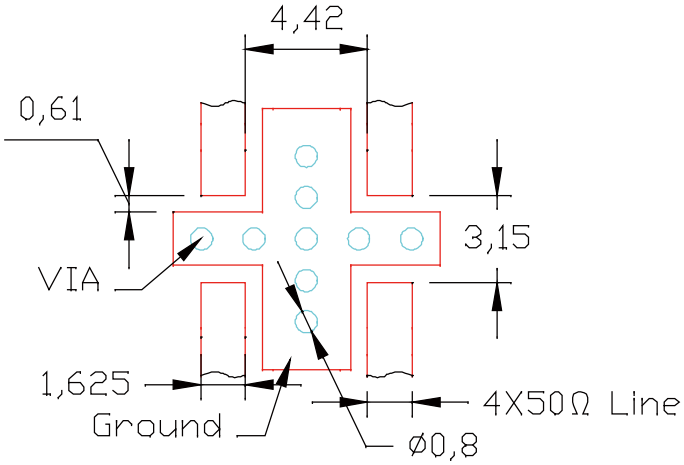

NOTE:

1. 50Ω line width is shown above designing from RO4350B dieletric thickness 0.762mm; copper 1 OZ
2. Bottom side of the PCB is continuous ground plane.
3. All dimensions shown in mm.

Reflow Profile

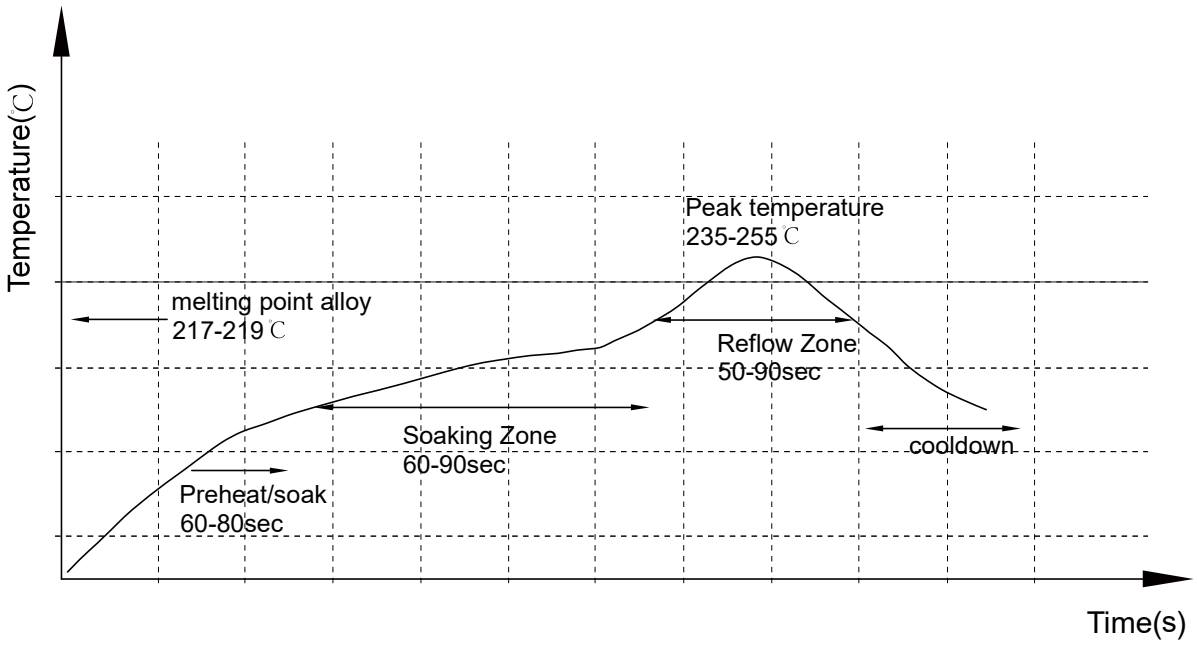

Add: No.308-322, 3F, Building 1, Juchuang Jingu Innovation Park, Wenyuan Road 35, Xili Street, Nanshan, Shenzhen, China
Tel: 86-755-8355-1886 Fax: 86-755-8355-2533
For detailed performance specs & shopping online see Yantel web site : www.yantel-corp.com

Reliability Test Flow

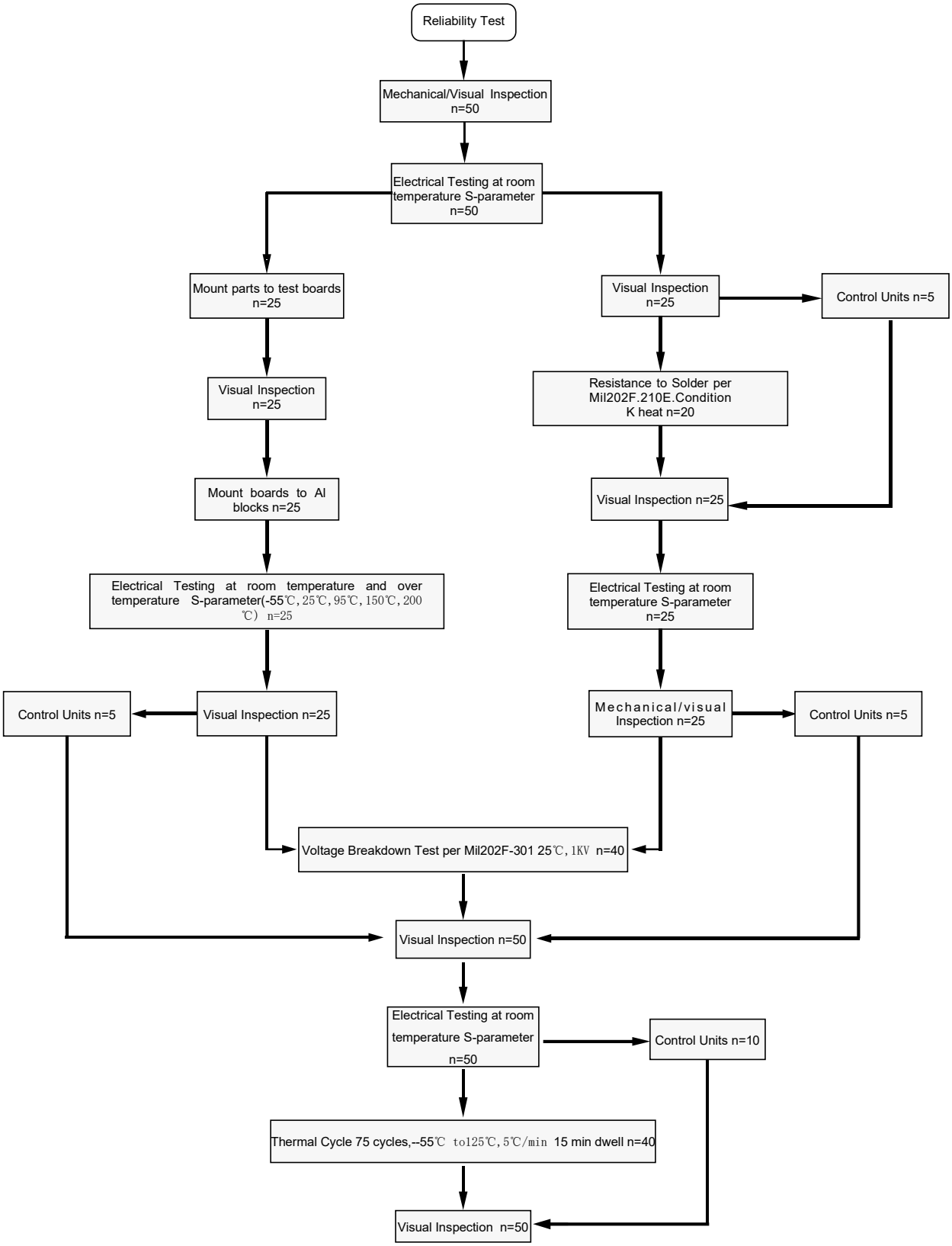

Add: No.308-322, 3F, Building 1, Juchuang Jingu Innovation Park, Wenyuan Road 35, Xili Street, Nanshan, Shenzhen, China
Tel: 86-755-8355-1886 Fax: 86-755-8355-2533

Reliability Test Flow

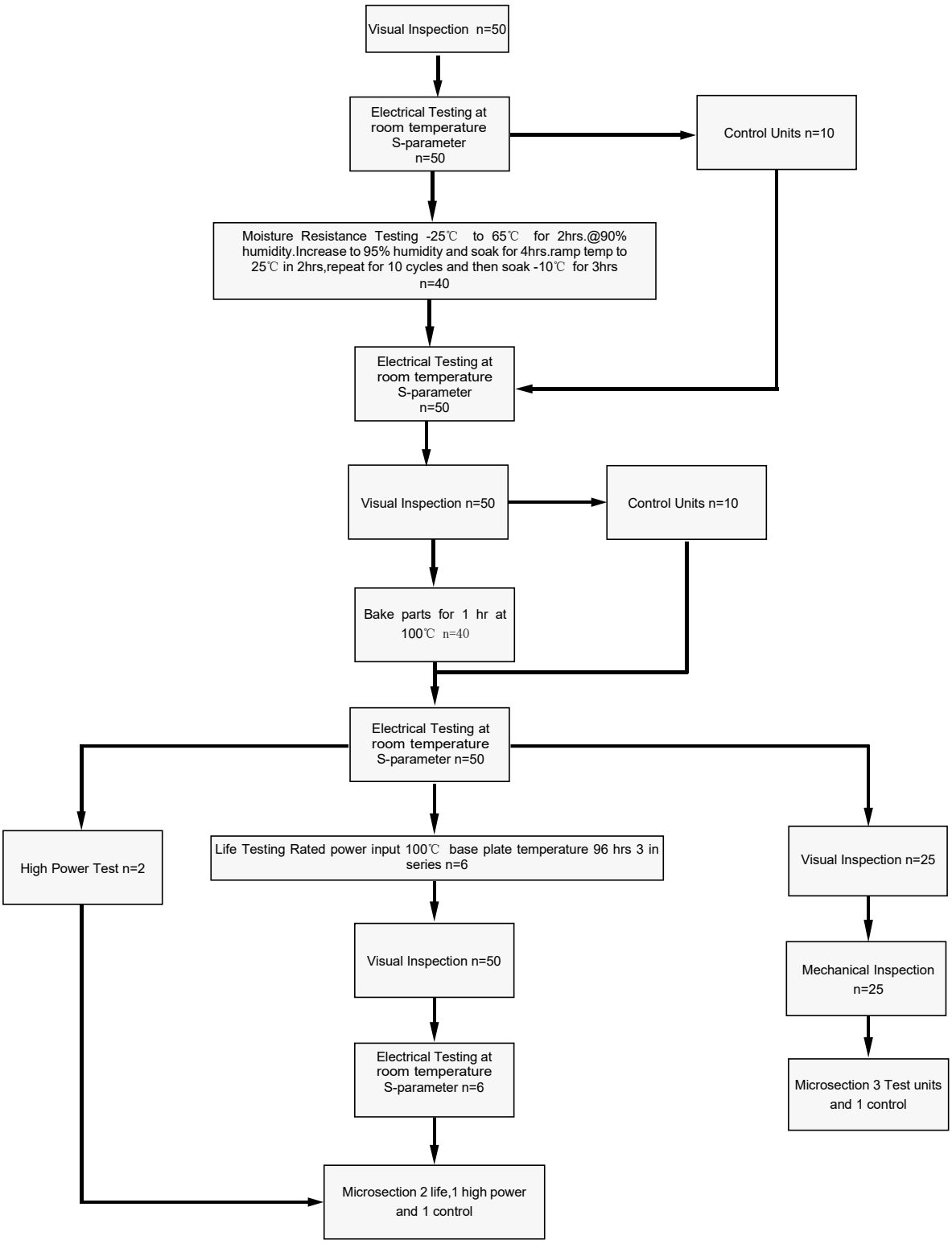

Yantel Corporation

Add: No.308-322, 3F, Building 1, Juchuang Jingu Innovation Park, Wenyuan Road 35, Xili Street, Nanshan, Shenzhen, China
Tel: 86-755-8355-1886 Fax: 86-755-8355-2533
For detailed performance specs & shopping online see Yantel web site : www.yantel-corp.com

DC2500P04

Directional Coupler

Rev A0

Tape and Reel Drawing

Feeding Direction

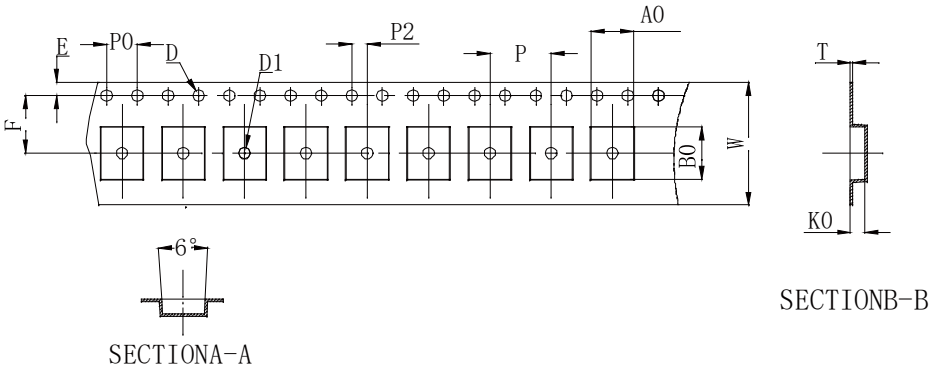

Notice:

A.10 Sprocket hole pitch cumulative tolerance is 0.2mm.

B. Carrier camber shall be not more than 1mm per 100mm through a length of 250mm.

C. All dimensions meet EIA-418-B requirements.

D. A0 & B0 measured as indicated.

E. K0 measured from a place on the inside bottom of the pocket to top surface of carrier.

F. Material: PE 100

G. Thickness: 0.30±0.05mm

H. 1000 units (maximum) / T&R

ITEM	W	A0	B0	K0	P	F	E	D	D1	P0	P2	T	7″
DIM(mm)	16.0	5.50	6.80	1.55	8.00	7.50	1.75	1.50	1.50	4.00	2.00	0.30	P/R
TOLE	+0.30 -0.30	+0.10 -0.10	+0.10 -0.10	+0.10 -0.10	+0.10 -0.10	+0.10 -0.10	+0.10 -0.10	+0.10 -0.00	+0.10 -0.00	+0.10 -0.10	+0.10 -0.10	+0.05 -0.05	1000pcs

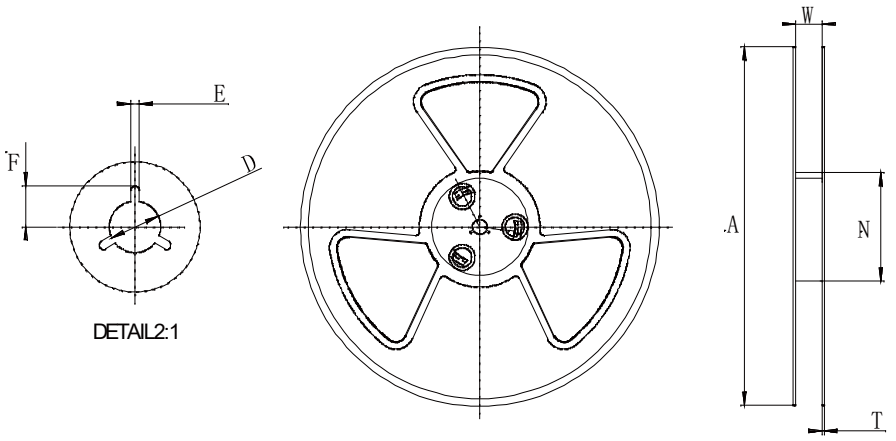

Symbol	Dimensions	
	(mm)	(inch)
W	16.5±0.4	0.65
A	177±0.5	7.0
N	63±0.3	2.48
T	1.8±0.2	0.071
E	2.1±0.3	0.083
F	10.75±0.3	0.423
D	13.5+0.5/-0.2	0.531

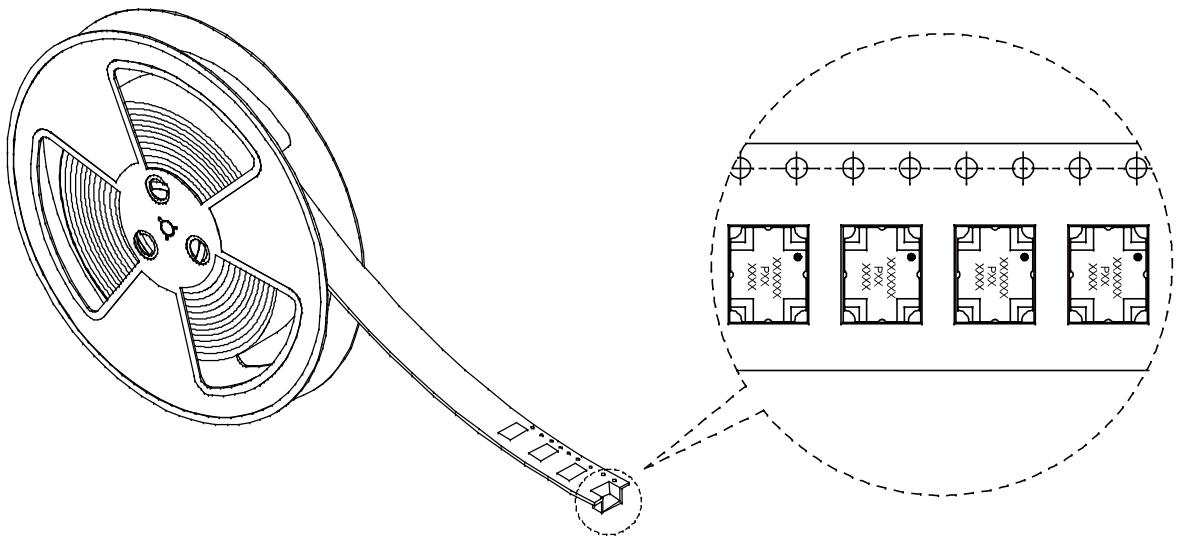

Yantel Corporation

Add: No.308-322, 3F, Building 1, Juchuang Jingu Innovation Park, Wenyuan Road 35, Xili Street, Nanshan, Shenzhen, China

Tel: 86-755-8355-1886 Fax: 86-755-8355-2533

For detailed performance specs & shopping online see Yantel web site : www.yantel-corp.com