DC2100P10

Directional Coupler

Rev B1

Description

The products are widely used in China and global 4G/5G base station, 5G network coverage, BeiDou navigation antenna, vehicle-mounted high-precision navigation (unmanned) antenna and other applications. The products have miniaturization, low-loss, wide-bandwidth, high power density, high reliability, high cost-effective and other competitive advantages.

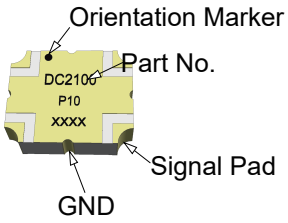

Features:

- 2000-2300 MHz
- 4G/5G base station
- Low Insertion Loss
- High Directivity
- Low VSWR
- Good Repeatability
- CTE compatible with FR4, G-10, RF-35, RO4350B and polyimide
- Immersion gold, prevent surface oxidation & scratch
- RoHS Compliant
- Tape & Reel Package available

Electrical Specifications

Frequency	Coupling	Directivity	VSWR
MHz	*dB*	*dB Min*	*Max : 1*
2000 - 2300	10±1.0	19	1.25

Insertion Loss	Power	Operating Temp.
dB Max	*Avg. CW Watts*	*°C*
0.25	20	-55 to +105

Note:
1. All above test data resulting from specify demo board.
2. Insertion loss has removed the thru board loss.

Mechanical Outline

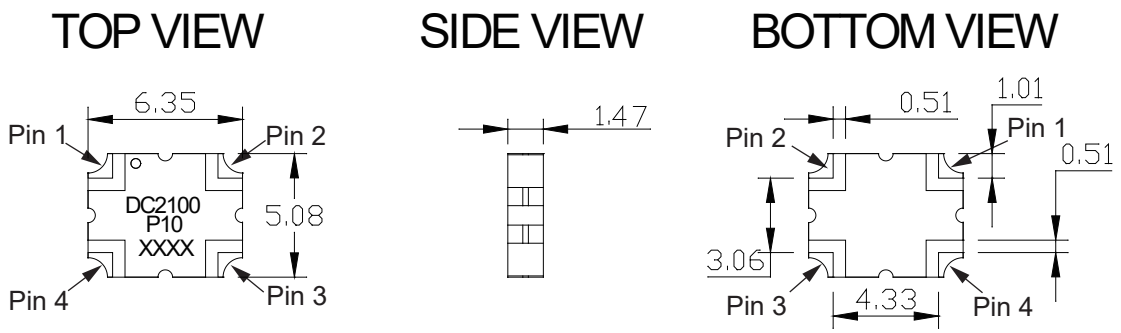

Note: 1. All Dimensions show in Millimeters
2. RoHS Compliant in accordance with EU Directive(2011/65/EU)
3. Dimension tolerance: ±0.20

Yantel Corporation

Add: No.308-322, 3F, Building 1, Juchuang Jingu Innovation Park, Wenyuan Road 35, Xili Street, Nanshan, Shenzhen, China
Tel: 86-755-8355-1886 Fax: 86-755-8355-2533
For detailed performance specs & shopping online see Yantel web site : www.yantel-corp.com

DC2100P10

Directional Coupler

Rev B1

Directional Coupler Pin Configuration

The DC2100P10 has an orientation marker to denote Pin 1. Once port one has been identified the other ports are known automatically. Please see the chart below for clarification:

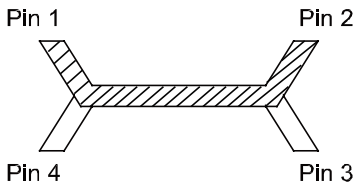

Pin 1	Pin 2	Pin 3	Pin 4
Input	Transmission	Isolate	Coupling
Transmission	Input	Coupling	Isolate

Typical Performance Data (@25℃)

Frequency (MHz)	Coupling (dB)	Transmission (dB)	Insertion Loss (dB)	Directivity (dB)	Return Loss(dB)			
					S11	S22	S33	S44
2000	-10.31	-0.54	-0.10	-18.39	-33.39	-32.18	-33.44	-29.89
2015	-10.33	-0.56	-0.12	-18.45	-33.22	-32.38	-33.88	-30.18
2030	-10.35	-0.58	-0.14	-18.35	-33.36	-33.59	-33.93	-30.48
2045	-10.39	-0.59	-0.16	-17.87	-34.46	-34.07	-34.56	-30.67
2060	-10.40	-0.55	-0.13	-17.64	-35.09	-34.15	-36.67	-30.56
2075	-10.35	-0.49	-0.07	-17.64	-35.97	-34.35	-37.32	-31.06
2090	-10.37	-0.49	-0.06	-17.47	-36.28	-34.24	-37.66	-31.73
2105	-10.40	-0.50	-0.08	-17.56	-35.56	-34.11	-38.24	-31.27
2120	-10.43	-0.53	-0.11	-17.55	-34.74	-34.83	-38.01	-30.79
2135	-10.43	-0.54	-0.12	-17.57	-34.32	-35.29	-37.46	-30.78
2150	-10.42	-0.54	-0.12	-17.67	-34.10	-35.22	-37.22	-30.68
2165	-10.39	-0.53	-0.10	-17.68	-34.38	-34.69	-36.97	-30.72
2180	-10.38	-0.51	-0.09	-17.59	-35.44	-34.40	-36.99	-30.35
2195	-10.36	-0.50	-0.07	-17.43	-36.57	-33.97	-37.62	-30.01
2210	-10.39	-0.51	-0.08	-17.39	-36.12	-34.14	-38.08	-29.90
2225	-10.44	-0.53	-0.11	-17.38	-34.69	-33.89	-37.90	-30.17
2240	-10.47	-0.54	-0.12	-17.35	-33.69	-33.68	-38.34	-30.03
2255	-10.50	-0.55	-0.14	-17.28	-32.88	-33.13	-38.25	-30.23
2270	-10.51	-0.55	-0.14	-17.19	-32.91	-32.79	-38.27	-30.08
2285	-10.46	-0.50	-0.08	-17.09	-33.33	-32.48	-38.32	-29.81
2300	-10.39	-0.40	0.01	-17.05	-33.35	-32.43	-38.33	-29.69

Yantel Corporation

Add: No.308-322, 3F, Building 1, Juchuang Jingu Innovation Park, Wenyuan Road 35, Xili Street, Nanshan, Shenzhen, China
Tel: 86-755-8355-1886 Fax: 86-755-8355-2533
For detailed performance specs & shopping online see Yantel web site : www.yantel-corp.com

Typical Performance (-55°C, 25°C & 105°C: 2000-2300 MHz)

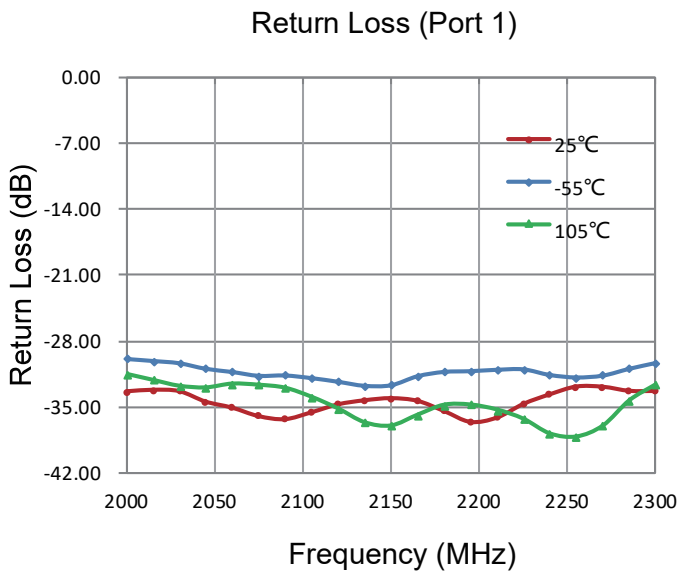

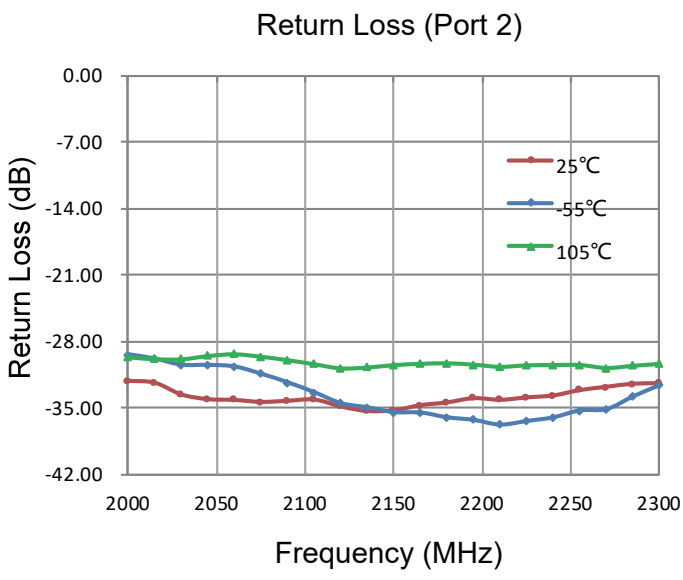

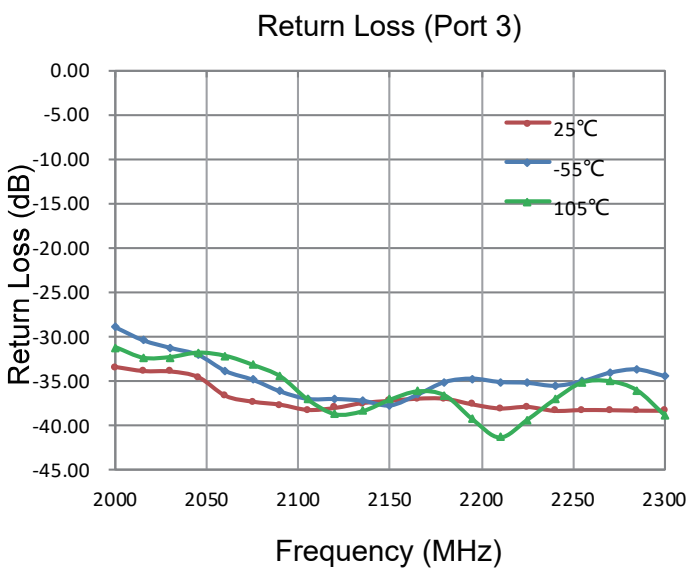

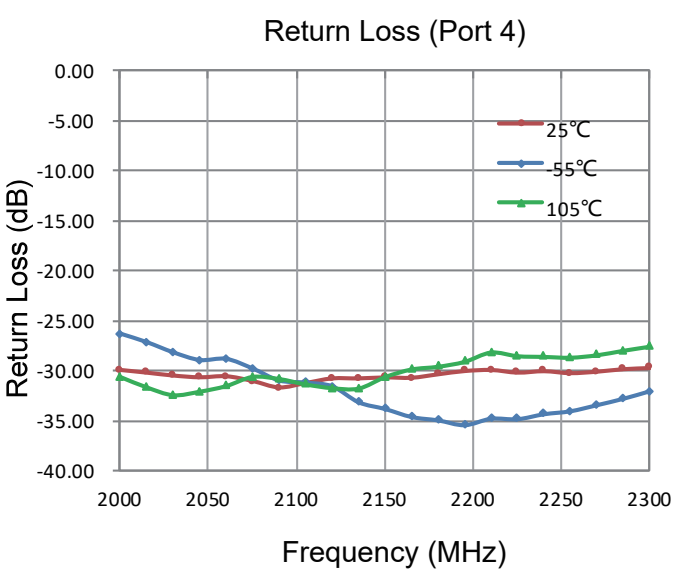

Typical Performance (-55°C, 25°C & 105°C:2000-2300 MHz)

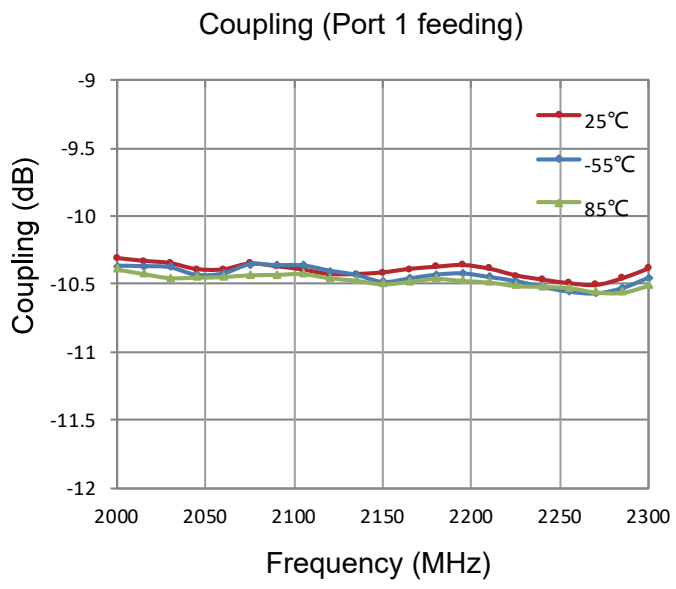

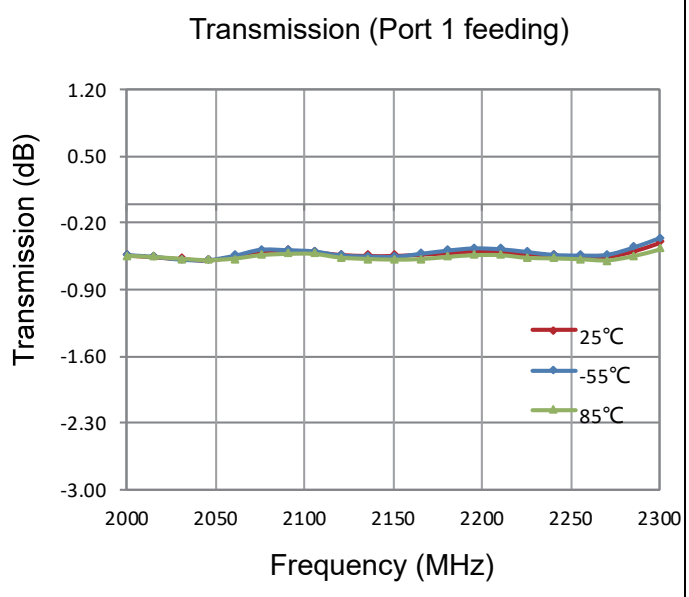

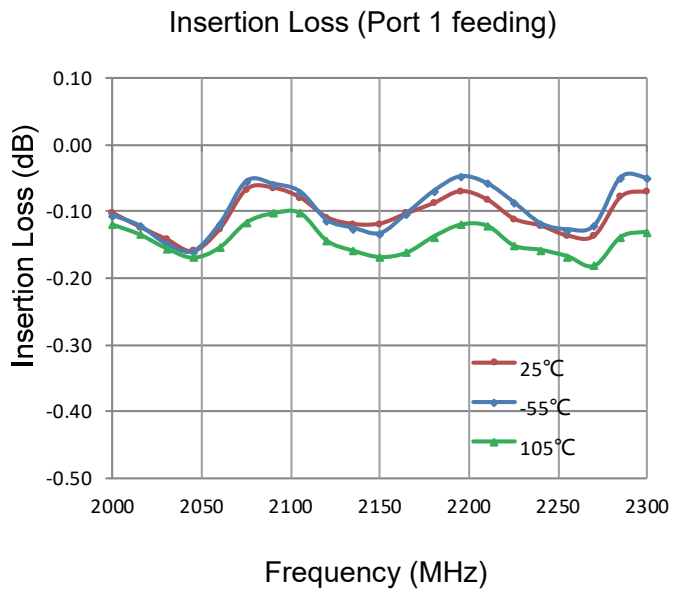

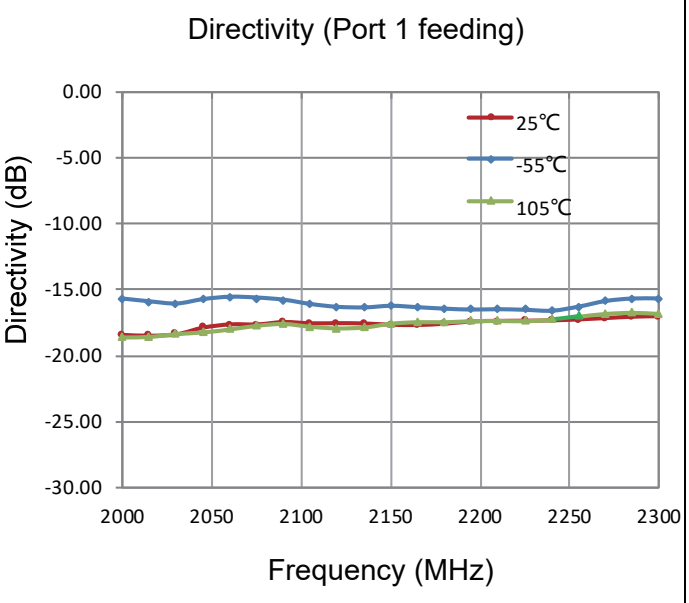

Yantel Corporation

Add: No.308-322, 3F, Building 1, Juchuang Jingu Innovation Park, Wenyuan Road 35, Xili Street, Nanshan, Shenzhen, China
Tel: 86-755-8355-1886 Fax: 86-755-8355-2533
For detailed performance specs & shopping online see Yantel web site : www.yantel-corp.com

DC2100P10

Directional Coupler

Rev B1

Description of Measured Specifications

Parameter	Description
VSWR	Voltage standing wave ratio, the impedance match to 50Ω, the ideal value is 1:1.
Return Loss	Loss of signal power resulting from the reflection caused by discontinuity of transmission line.
Insertion Loss	The input power divided by sum of power at the coupling port & transmission port.
Coupling	The input power divided by the power at coupling port.
Transmission	The input power divided by the power at transmission port.
Directivity	The power at the coupling port divided by the power at the isolated.

Test Method

1. Calibrating your vector network analyzer.
2. Connect the VNA 4 Port to DUT respectively.
3. Measure the data of coupling through port 1 to port 4(S41).
4. Measure the data of transmission through port 1 to port 2(S21).
5. Measure the data of isolation through port 1 to port 3(S31).
6. Measure the data of return loss port 1, port 2, port 3 & port 4.
7. According to the above data to calculate insertion loss, directivity.

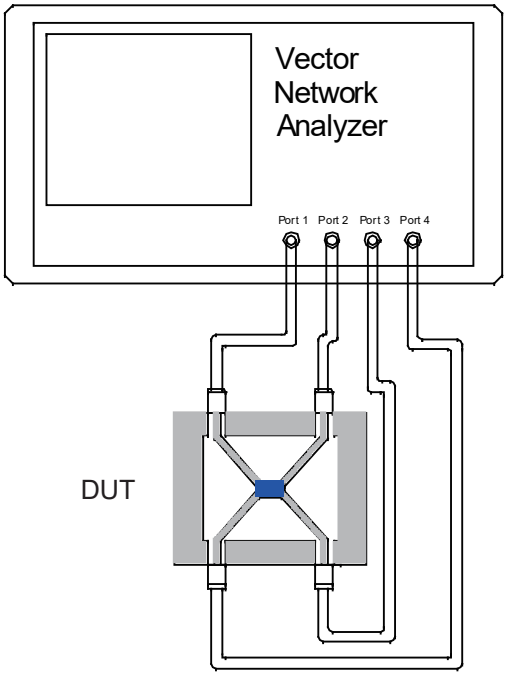

Note:
1. When calculating insertion loss at room termperature, coupling & transmission data both need remove demo board loss.
Please see demo board loss data below the table :

Frequency Range(MHz)	Demo Board Loss (dB) @25℃
470-860	0.06~0.10
800-1000	0.10~0.15
1200-1700	0.15~0.20
1700-2000	0.20~0.25
2000-2300	0.20~0.25
2300-2700	0.25~0.30

Yantel Corporation

Add: No.308-322, 3F, Building 1, Juchuang Jingu Innovation Park, Wenyuan Road 35, Xili Street, Nanshan, Shenzhen, China
Tel: 86-755-8355-1886 Fax: 86-755-8355-2533
For detailed performance specs & shopping online see Yantel web site : www.yantel-corp.com

Recommended PCB Layout

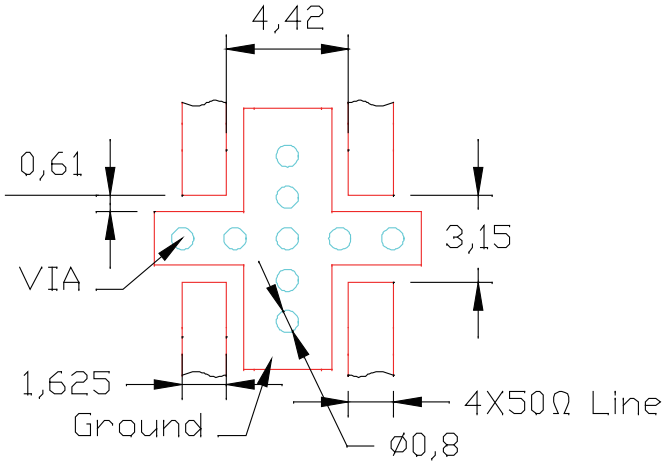

NOTE:

1. 50Ω line width is shown above designing from RO4350B dieletric thcikness 0.762mm; copper 1 OZ
2. Bottom side of the PCB is continuous ground plane.
3. All dimensions shown in mm.

Reflow Profile

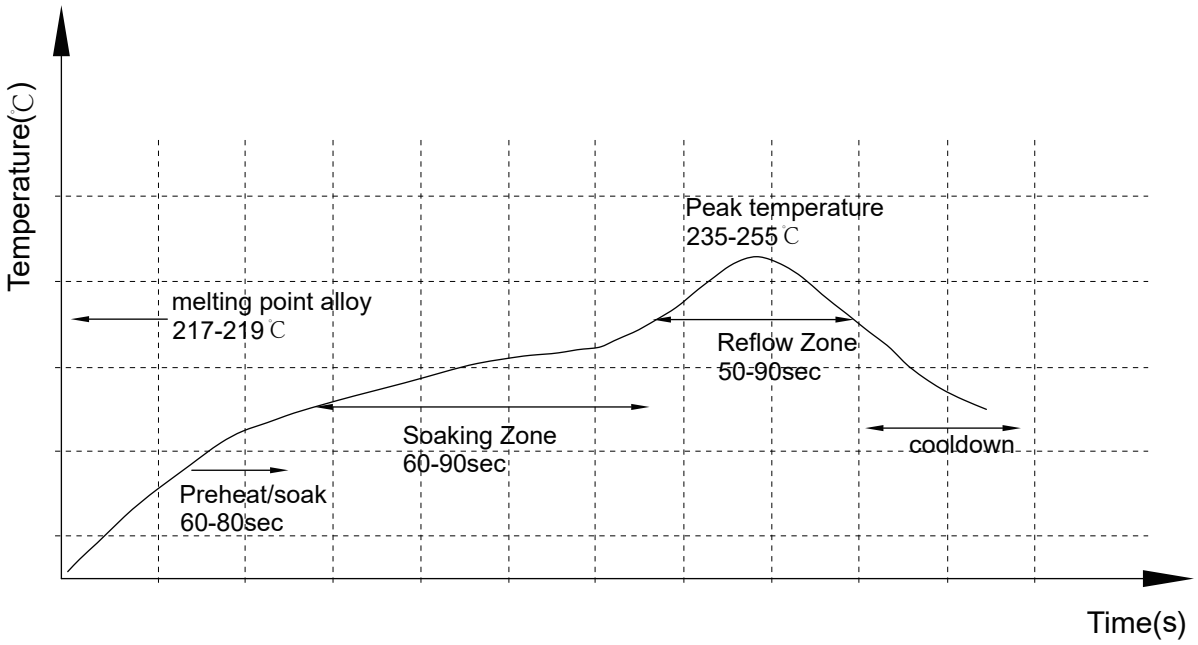

Add: No.308-322, 3F, Building 1, Juchuang Jingu Innovation Park, Wenyuan Road 35, Xili Street, Nanshan, Shenzhen, China
Tel: 86-755-8355-1886 Fax: 86-755-8355-2533
For detailed performance specs & shopping online see Yantel web site : www.yantel-corp.com

Reliability Test Flow

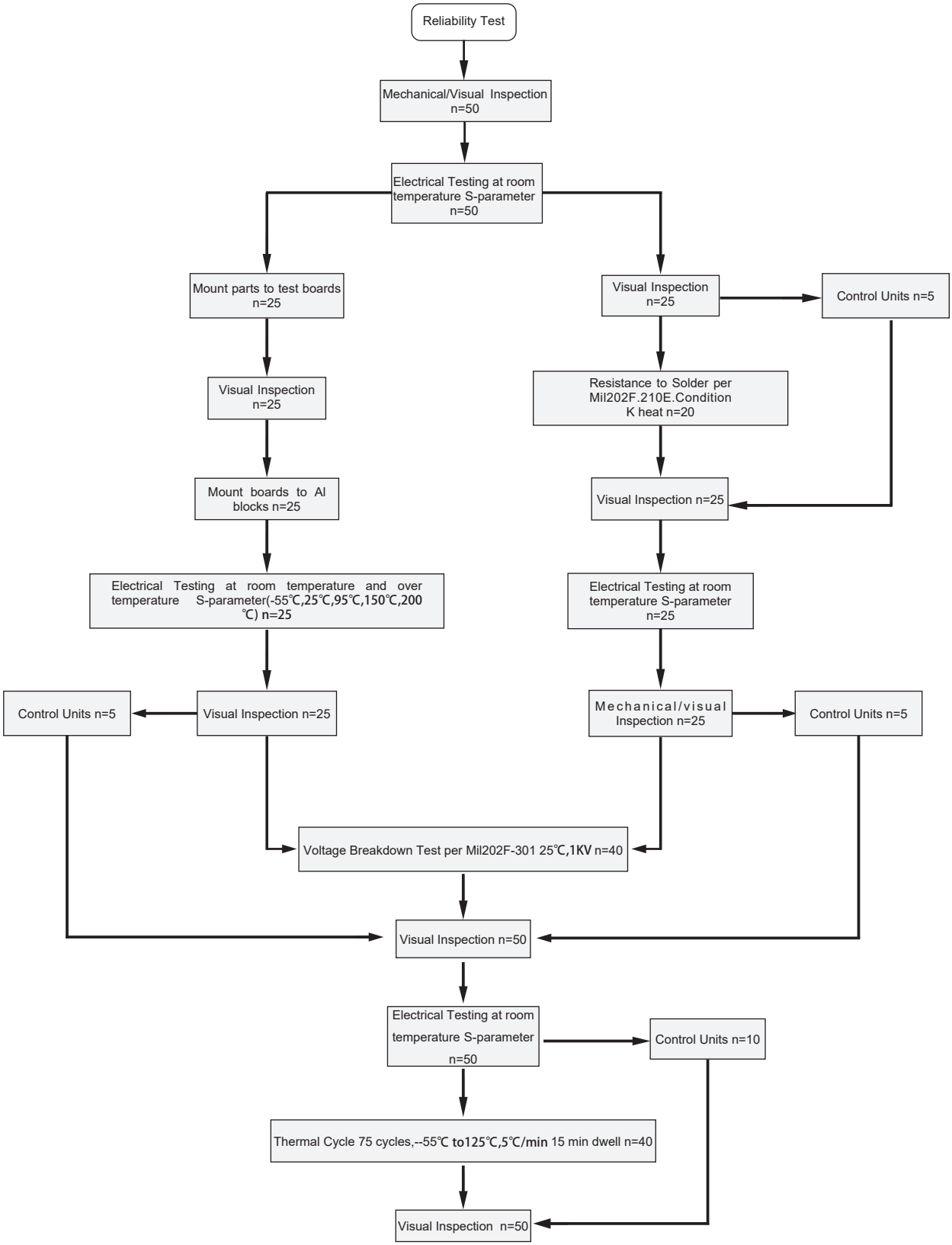

Add: No.308-322, 3F, Building 1, Juchuang Jingu Innovation Park, Wenyuan Road 35, Xili Street, Nanshan, Shenzhen, China
Tel: 86-755-8355-1886 Fax: 86-755-8355-2533
For detailed performance specs & shopping online see Yantel web site : www.yantel-corp.com

Reliability Test Flow

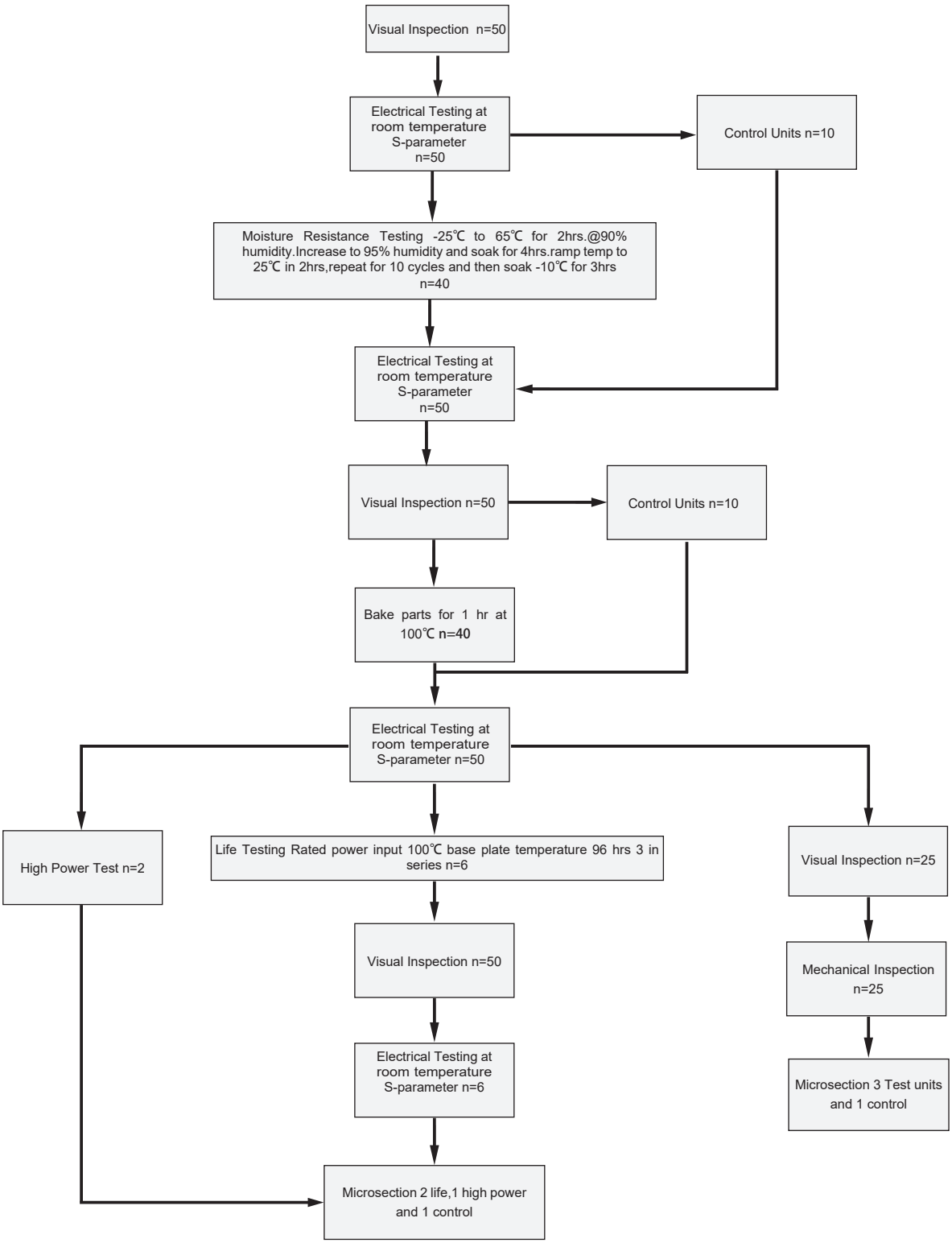

Add: No.308-322, 3F, Building 1, Juchuang Jingu Innovation Park, Wenyuan Road 35, Xili Street, Nanshan, Shenzhen, China
Tel: 86-755-8355-1886 Fax: 86-755-8355-2533
For detailed performance specs & shopping online see Yantel web site : www.yantel-corp.com

DC2100P10

Directional Coupler

Rev B1

Tape and Reel Drawing

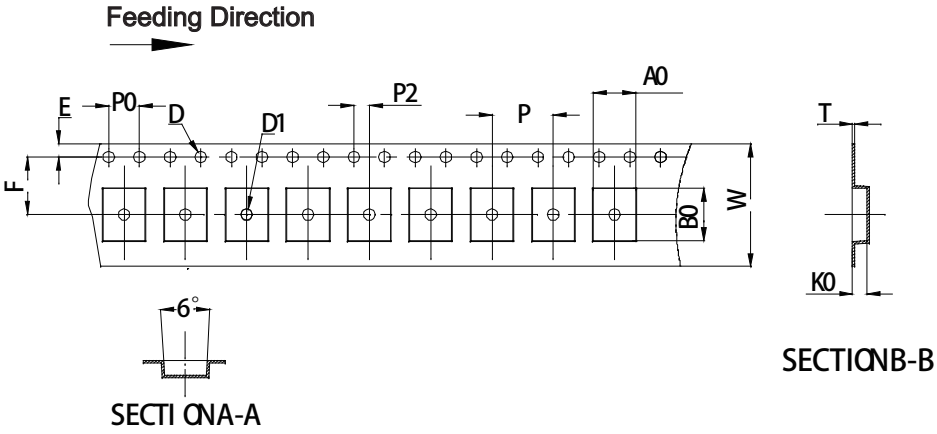

Notice:

A.10 Sprocket hole pitch cumulative tolerance is 0.2mm.

B. Carrier camber shall be not more than 1mm per 100mm through a length of 250mm.

C. All dimensions meet EIA-418-B requirements.

D. A0 & B0 measured as indicated.

E. K0 measured from a place on the inside bottom of the pocket to top surface of carrier.

F. Material: PE 100

G. Thickness: 0.30±0.05mm

H. 1000 units (maximum) / T&R

ITEM	W	A0	B0	K0	P	F	E	D	D1	P0	P2	T	7″
DIM(mm)	16.0	5.50	6.80	1.90	8.00	7.50	1.75	1.50	1.50	4.00	2.00	0.30	P/R
TOLE	+0.30 -0.30	+0.10 -0.10	+0.10 -0.10	+0.10 -0.10	+0.10 -0.10	+0.10 -0.10	+0.10 -0.10	+0.10 -0.00	+0.10 -0.00	+0.10 -0.10	+0.10 -0.10	+0.05 -0.05	1000pcs

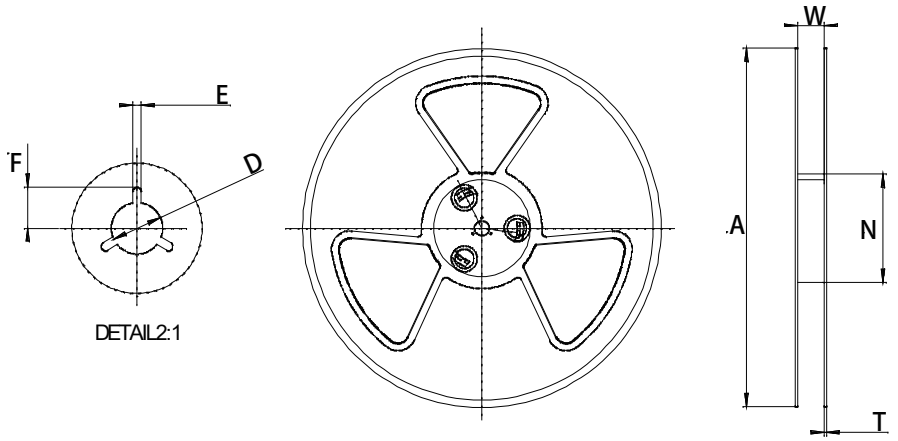

Symbol	Dimensions	
	(mm)	(inch)
W	16.5±0.4	0.65
A	177±0.5	7.0
N	63±0.3	2.48
T	1.8±0.2	0.071
E	2.1±0.3	0.083
F	10.75±0.3	0.423
D	13.5+0.5/-0.2	0.531

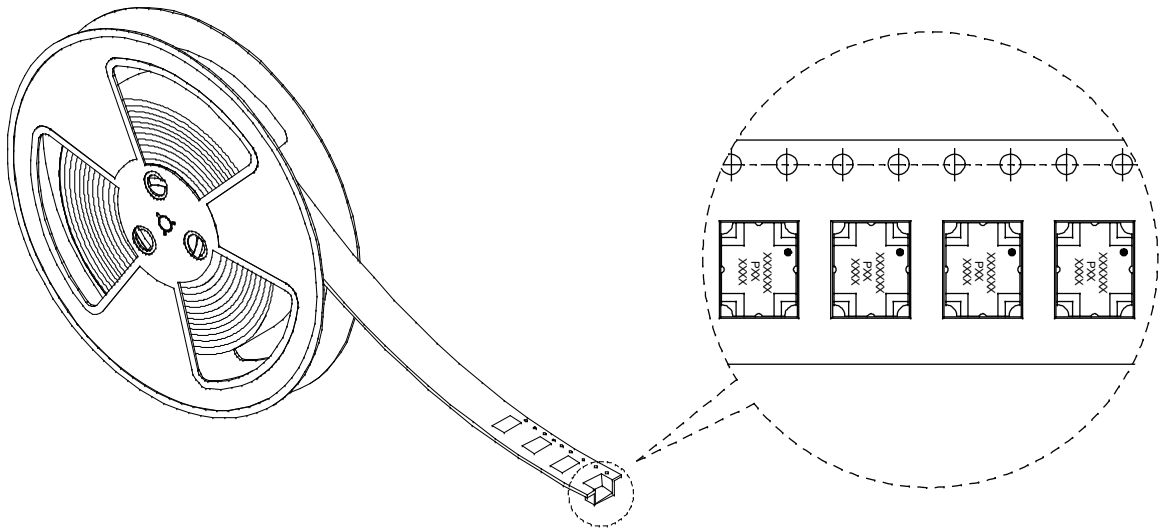

Yantel Corporation

Add: No.308-322, 3F, Building 1, Juchuang Jingu Innovation Park, Wenyuan Road 35, Xili Street, Nanshan, Shenzhen, China
Tel: 86-755-8355-1886 Fax: 86-755-8355-2533
For detailed performance specs & shopping online see Yantel web site : www.yantel-corp.com